**Army Research Laboratory**
Aberdeen Proving Ground, MD 21005-5066

**ARL-MR-513** **May 2001**

# Examination of a High-Explosive Round for a High-Aspect Ratio Railgun Bore

Alexander Zielinski
Weapons and Materials Research Directorate, ARL

Approved for public release; distribution is unlimited.

# Abstract

A railgun bore with a rectangular cross section is advantageous for launching a hypervelocity kinetic energy penetrator. An analysis is presented that supports the operation of a mass-stablized round with a high-explosive (HE) payload from the same bore. The design criteria and two bounding cases are provided to illustrate the effectiveness. Modifications to the bore insulators, ranging from 0 to 15 mm, can provide space for the projectile base diameter. The resultant HE round provides an increased capability, compared to conventionally launched HE rounds in velocity, armor penetration, and payload capacity.

# Contents


List of Figures v

List of Tables vii

1. Introduction 1

2. Conventional HE Rounds 2

3. Pulsed Power 3

4. Electromagnetically Launched Round 4

5. Conclusions 10

6. References 11

Distribution List 13

Report Documentation Page 17

INTENTIONALLY LEFT BLANK.

## List of Figures

Figure 1. Exit velocity as a function of in-bore mass. Indicated values are peak acceleration, kgees....4

Figure 2. Illustration of a mass-stabilized, high-explosive (MsHE) round. Dimensions are in calibers....5

Figure 3. Possible bore cross section for the RSD with insulator modification. Dimensions are in inches....6

Figure 4. Mass-stabilized HE round for a high aspect ratio bore cross section. Note: not all details are illustrated....7

Figure 5. Trade space for removing material from the bore insulators to accommodate a base diameter larger than the armature height....9

INTENTIONALLY LEFT BLANK.

## List of Tables

Table 1. Summary of Phase II and I single-taper sabot ILP parameters.....1
Table 2. Physicals for the Bofors 40-mm 3P round.....2
Table 3. Summary of performance for MsHE rounds.....9

INTENTIONALLY LEFT BLANK.

# 1. Introduction

The primary goal of the current electromagnetic program is to follow a technology path to achieve the Phase II integrated launch package (ILP) requirements. Those requirements are (1) 11 MJ at 2.5 km/s with a (maximum) 50% parasitic mass fraction and (2) a kinetic energy penetrator with a (minimum) length-to-diameter (L/D) ratio of 20. A design methodology was developed based on these requirements, and engineering approximations were used to assess electromagnetic launch. A range of bore cross sections and ILP dimensions were identified to satisfy the Phase II requirements. Additionally, a reduced-scale launcher and ILP were identified that satisfy critical engineering parameters to demonstrate the Phase II requirements. A summary of the parameters for the Phase I reduced-scale demonstration (RSD) and the Phase II ILP are listed in Table 1. Details of the engineering study are found in the literature [1–2].

Table 1. Summary of Phase II and I single-taper sabot ILP parameters.

| ILP Parameter | Phase II ILP | Phase I RSD |
|---|---|---|
| Sabot Configuration | Single taper | Single taper |
| Peak Current (MA) | 2.9 | 1.7 |
| Velocity (km/s) | 2.5 | 2.3 |
| Length to Diameter (L/D) | 20 | 20 |
| Rod Diameter (mm) | 18 | 10 |
| Useful Mass (%) | ~45 | ~35 |
| Muzzle Energy (MJ) | 11 | 2 |
| Bore Dimension (mm) | 66 × 126 | 38 × 76 |
| Projectile Travel (m) | 6 | 3 |
| Action ($GA^2$-s) | 27.2 | 5.4 |
| Breech Energy (MJ) | 16.5 | 3.3 |

For the current examination, it is assumed that a multiphase machine is adequate for the RSD mission (3.3 MJ, 1.7 MA), and that the result of changing the in-bore mass and launch velocity has little effect on the delivered current pulse shape. Essentially, the number of discharges from the individual phases can be increased to provide for the pulse width needed to achieve performance.

## 2. Conventional HE Rounds

One kind of HE round in medium caliber is the Bofors 40-mm 3P round [3]. The round has been used since the early 1970s, and it has a multifunctional role [4]. The 3P is considered a proximity round, but has three primary modes, including impact, timed, and proximity (continuous, gated, and impact priority) functions. The round is also capable of penetrating 15 mm of armor at 2 km. Typical targets for this round include soft (e.g., bunkers and infantry), sea surface (e.g., sea skimmers and patrol boats), aerial (e.g., helicopters, missiles, transport aircraft, and attack aircraft), and ground (e.g., trucks, personnel carriers, and lightly armored vehicles) targets. Physical data relevant to the 40-mm 3P is summarized in Table 2.

Table 2. Physicals for the Bofors 40-mm 3P round.

| Characteristic | Value |
|---|---|
| Velocity (km/s) | 1.1 |
| Mass | |
| Cartridge (kg) | 2.5 |
| Round (kg) | 0.975 |
| HE (kg) | 0.12 |
| Fuze, S&A electronics (estimated, kg) | ~0.2 |
| Dimensions (cylindrical, diameter × length) | |
| Cartridge (mm × mm) | 40 × 534 |
| Round (mm × mm) | 40 × 230 |
| Fuze, S&A electronics (mm × mm) | 20 × 80 |

An additional limitation, not captured by the physicals listed in Table 2, is the acceleration limit on the fuze and safety and arming (S&A) electronics. For the 40-mm round, this limitation is roughly 60 kgees and is based on the maximum pressure in the gun tube [5]. Readily available electronics is considered for this application, recognizing that microelectromechanical systems (MEMS) advance quite rapidly [6]. The presumption is that incorporating either MEMS devices or an alternative conventional fuze (for rounds less than 40 mm) will result in more HE payload and/or higher velocity (i.e., higher acceleration limit on the electronics).

## 3. Pulsed Power

Launch of the Phase I ILP depends on the generation of the required current pulse. A preliminary machine design exists that can produce a peak of 1.7 MA [7]. For the present analysis, it is assumed that the machine can supply that peak current, irrespective of the mass in the launcher or the exit velocity. The time development of projectile dynamics can influence the current generation somewhat, but this assumption is not anticipated to be very restrictive, considering that the design for the HE round is likely to be a larger mass and a slower velocity as compared to the RSD round.

Figure 1 shows the effect on launch velocity as a function of in-bore mass. As mentioned, it is assumed that the machine can generate 1.7 MA, with a 1 ms rise and fall time, such that the armature current is zero when the HE round reaches the end of the launcher. Lower peak currents are also considered.

Also indicated in Figure 1 is the acceleration, which can be used to define an upper limit on the launch velocity. The plot also includes the single-shot action, the time-integral of the current squared, which is useful for defining conductor thermal response. The action limit shown (solid black line) is based on the kinetic energy penetrator RSD. Also shown is the RSD action increased by 30% (dashed black line). For machines that deliver multiple pulses for multiple shots, flexibility in the fire doctrine (i.e., rate of fire, number of shots in a salvo, and time between salvos) can be used to provide for increased action per shot, albeit at less rounds in the salvo. The plot indicates that a maximum velocity, defined by the acceleration limit, is roughly 1.5 km/s at a mass of 1.15 kg. Smaller and larger launch masses are possible, as are higher velocities for increased acceleration limits. For the RSD action limit, the machine can launch an in-bore mass of roughly 0.9 kg to 1.9 km/s; however, the round will experience an acceleration in excess of 100 kg. For the aforementioned 60 kg limit, the machine cannot be utilized at its peak current rating of 1.7 MA at the RSD action; a peak current of 1.5 MA will suffice.

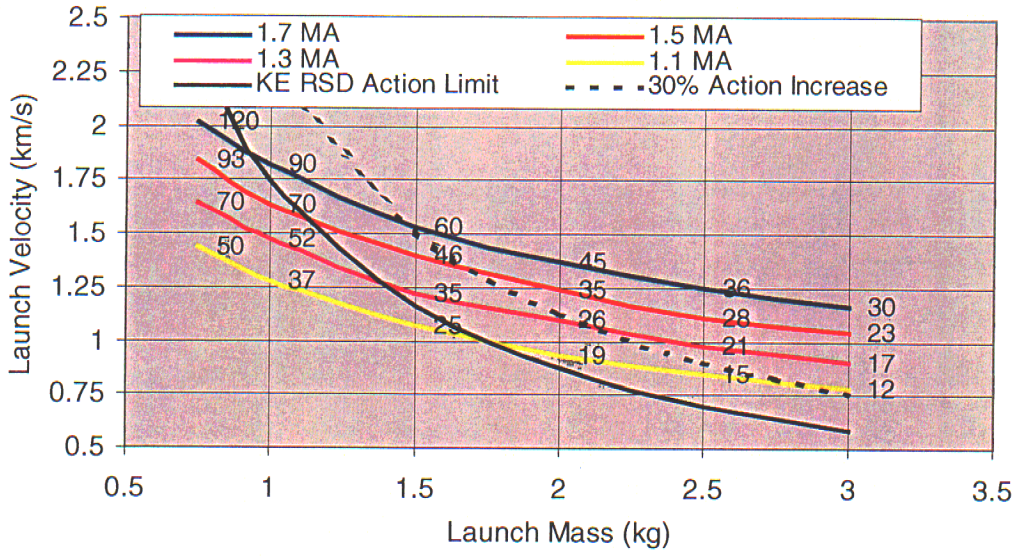


Figure 1. Exit velocity as a function of in-bore mass. Indicated values are peak acceleration, kgees.

## 4. Electromagnetically Launched Round

Typically, conventionally launched HE rounds are spin stabilized. With current electromagnetic launch technology, spin-stabilized rounds cannot be readily accommodated. However, an alternative aerodynamic stabilization mechanism can be employed. Dual-density conical flight bodies, traditionally called Rodman cones, are stabilized by virtue of locating the center-of-mass ahead of the center of aerodynamic pressure [8–9]. Design criteria have been developed with regards to electromagnetic launch requirements [3]. An illustration of a mass-stabilized, high-explosive (MsHE) configuration is shown in Figure 2. The dashed portion is expected to contain both the S&A electronics and the HE payload. One attractive feature of the topology is the use of a high-density material for the nosetip. A tungsten nosetip is useful for penetrating armor targets.

Currently, HE has not been exposed to the electromagnetic environment generated by a railgun. However, based on the relatively poor electrical conductivity and location of the payload cavity to the current carrying armature structure, deleterious effects are not expected. Furthermore, the effect of the environment on the fuze electronics and turbine alternator has been studied for

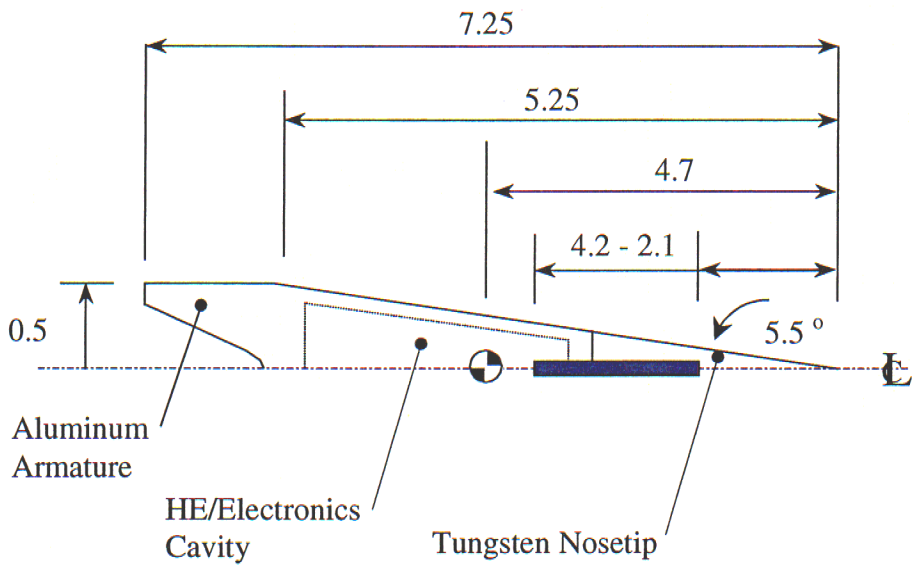


Figure 2. Illustration of a mass-stabilized, high-explosive (MsHE) round. Dimensions are in calibers.

the M734, multi-option fuze for mortar (MOFM) [10]. Some modest amount of shielding was used to effectively negate any effects of in-bore environment.

For the Phase I and II demonstrations, the rectangular bore cross section with an aspect ratio of two seems to suggest either a very inefficient flight body or a nonsymmetrical flight body. The effect of noncircular flight body cross section has been considered [11]. While the geometry offers potential aerodynamic and payload benefits, it was assumed that a flight body, with an axis-symmetric cross section, presents a lower technical risk for demonstration. Mass inefficiencies can be minimized if material occupied by the bore insulators can be removed to allow for a more axially symmetric configuration. For the current bore configuration, the bore insulators merely guide the ILP as it is accelerated down bore. Certainly, the insulators can affect the in-bore dynamic profile, and therefore the in-bore dynamic loads, and its impact should not be trivialized. Also, in the current bore configuration, the bore insulators help transfer rail repulsive loads to the containment structure. Whether this situation can be tolerated or an alternative rail/insulator interface is required remains to be addressed.

The most symmetric projectile base geometry is circular. However, the flight body would tend to be quite massive, leaving very little muzzle energy in the form of velocity. As a compromise, a "clover-leaf" base pattern was selected for the base geometry. This assumption is not expected to significantly change the trends of this study.

The amount of in-bore mass that can be expected by using the aerodynamically stable configuration presented in Figure 2 is considered. The rectangular bore cross section for Phase I is used for this examination, and it is illustrated in Figure 3. Two cases are considered for bounding the problem. In the first case, the armature height defines the base diameter. For Phase I, the base diameter is 38 mm, and no material needs to be removed from the insulators. In the second case, the rail-to-rail spacing is used as an upper bound and is 76 mm. The dashed line is the configuration of the insulators resulting from considering a kinetic energy ILP. A scalloped section is necessary to accommodate a large, axis-symmetric base for the HE launch package. No attempt is made to resolve structural issues (if any) to both the insulators and launcher containment.

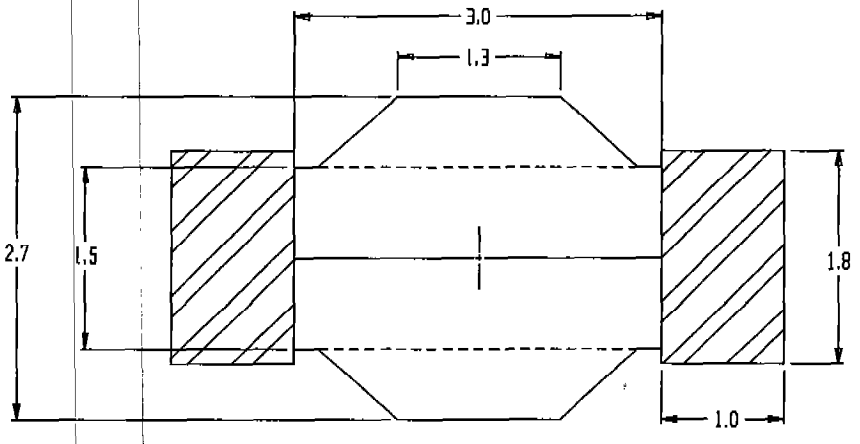


Figure 3. Possible bore cross section for the RSD with insulator modification. Dimensions are in inches.

For an aerodynamically stable configuration, the length of the conical nose should be roughly 35% of the flight body, with greater lengths providing increased stability, mass, and penetration. Aerodynamic stability considerations also limit the maximum length of the flight body to roughly 7 calibers, where 1 caliber is taken to be the base diameter, or roughly a circle bounded by either the armature height (38 mm) or the rail-to-rail spacing (76 mm). The (full) cone angle, appropriate for a stable round, is also somewhat limited, but values of 11° are possible and have demonstrated successful aerodynamic stability.

It is assumed that a portion of the aluminum conical flight body is hollow, allowing for volume to be consumed by the fuze, S&A electronics, and HE payload. An illustration of an MsHE round is shown in Figure 4, but some details are not shown. For example, for a large-diameter base, the top and bottom portion of the clover-leaf base should be flat, to adequately contact the insulator. This portion behaves as a flare, along with the parabolic armature

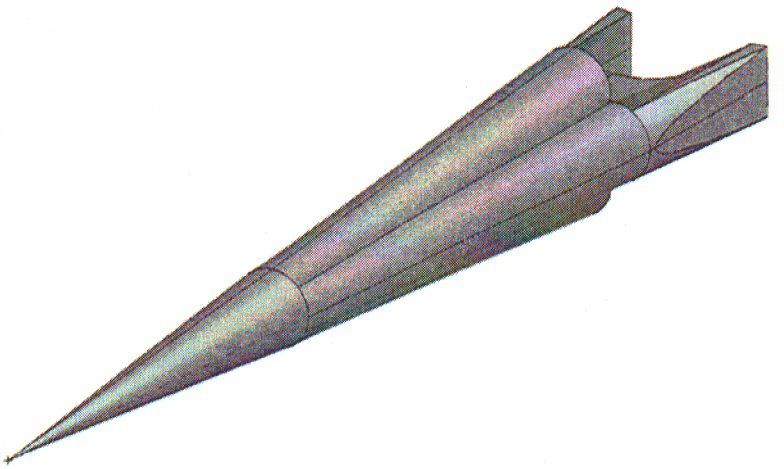

Figure 4. Mass-stabilized HE round for a high aspect ratio bore cross section. Note: not all details are illustrated.

contact area, thereby providing the round with further aerodynamic stability. Additionally, the tungsten nosetip requires in-bore support during acceleration, which can most easily be accomplished by incorporating strakes or canards along the conical portion of the aluminum flight body. The angled portion of the bore insulators can be used as an in-bore guide.

As with the armature for a large base diameter, these bore riders that serve for stability and/or roll control do not discard after the projectile exits. For the lower bound (i.e., base diameter = armature height), it is anticipated that the armature discards upon exiting.

The aerodynamic drag coefficient of a Rodman cone was evaluated experimentally and analytically and can be described for velocities greater than the speed of sound [8] , as in

$$C_D = 0.67(V/343)^{-0.81}, \tag{1}$$

where V is the launch velocity in m/s.

The retardation, R, essentially the loss in velocity per unit range [8], can be described as

$$R = \frac{\Delta V}{\Delta X} \approx \frac{V}{\lambda}, \tag{2}$$

where λ is called the ballistic coefficient [8] and is expressed as

$$\lambda = \frac{2M}{\rho_a s C_D}, \tag{3}$$

where $\rho_a$ is the density of air (1.2 kg/m$^3$), and s is the base area of the flight body.

The retardation expressed in equation 1 is a minimum value, since it was assumed that the change in velocity is small relative to the launch velocity (which is not the case for all the scenarios investigated). However, this assumption allows a relatively simple expression for velocity, as well as a quick evaluation of maximum at-range penetration. For HE rounds, penetration does not constitute a significant portion of the lethality of the rounds.

Finally, the conical nose fabricated from tungsten provides for armor penetration. The entire length of the tungsten nose does not contribute to penetration as though the cone were a cylinder of equal length. For simplicity, the mass of the tungsten nose is converted to a cylinder with a diameter at the tungsten/aluminum joint, thereby reducing the effective length of the penetrator. The mass of the aluminum flight body is converted to a shortened cylinder having the density of tungsten and added to the (cylindrical) tungsten nose. An effective penetrator with a ratio of L/D of roughly three is possible.

A summary of the two bounding cases (38-mm and 76-mm base diameters) appears in the first two rows of Table 3. Also shown are other solutions where a constraint was increased. For example, if the acceleration limit on the electronics is increased to 100 kgees, performance can be increased up to the current and single-shot action rating of the machine (1.7 MA, 5.5 GA$^2$-s). Similarly, for the 60 kgee limit with a 30% increase in action, the in-bore mass and HE payload can be increased. The increase in mass comes at the expense of removing material from the insulators, thereby allowing for an increased base diameter. There is no fundamental limit for the amount of material removed from the insulators; however, an engineering analysis is required. These alternate solutions are shown in Table 3, below the two bounding cases.

A solution that allows for a multifunctional role incorporates scallops in the insulators to be as large as structurally feasible. In this manner, the bore can accommodate both a large base diameter solution, which is amenable to a large HE payload, or a small base diameter, which is amenable to a relatively large armor penetration with a modest HE payload.

Figure 5 displays the design space graphically and includes data for conventional medium-caliber HE and KE rounds. The amount of HE for the conventional rounds is roughly 33 gm for a 30-mm gun and 113 gm for a 40-mm gun; these are essentially values corresponding to the small launch mass solutions. However, the velocities are substantially higher for the electromagnetically launched rounds.

Table 3. Summary of performance for MsHE rounds.

| Case | Mass (kg) | Velocity (km/s) | HE Payload (gm) | RHA at 2 km (mm) | Acc (kgees) | Current (MA) | Action ($GA^2$-s) |
|---|---|---|---|---|---|---|---|
| 38 mm (lower bound) | 0.6[a] | 1.55 | 27 | 25 | 60 | 1.1 | 3.1 |
| 76 mm (upper bound) | 2.8 | 0.62 | 650 | 4 | 7 | 0.8 | 5.7 |
| Increased Acceleration | 0.9 | 1.88 | 27<HE<650 | 4<RHA<25 | 100 | 1.7 | 5.5 |
| Increased Action | 1.5 | 1.53 | | | 60 | 1.7 | 7.5 |
| Increased Action | 2.8 | 0.82 | | | 13 | 1.1 | 7.4 |

[a] Armature mass not included as part of the flight mass.

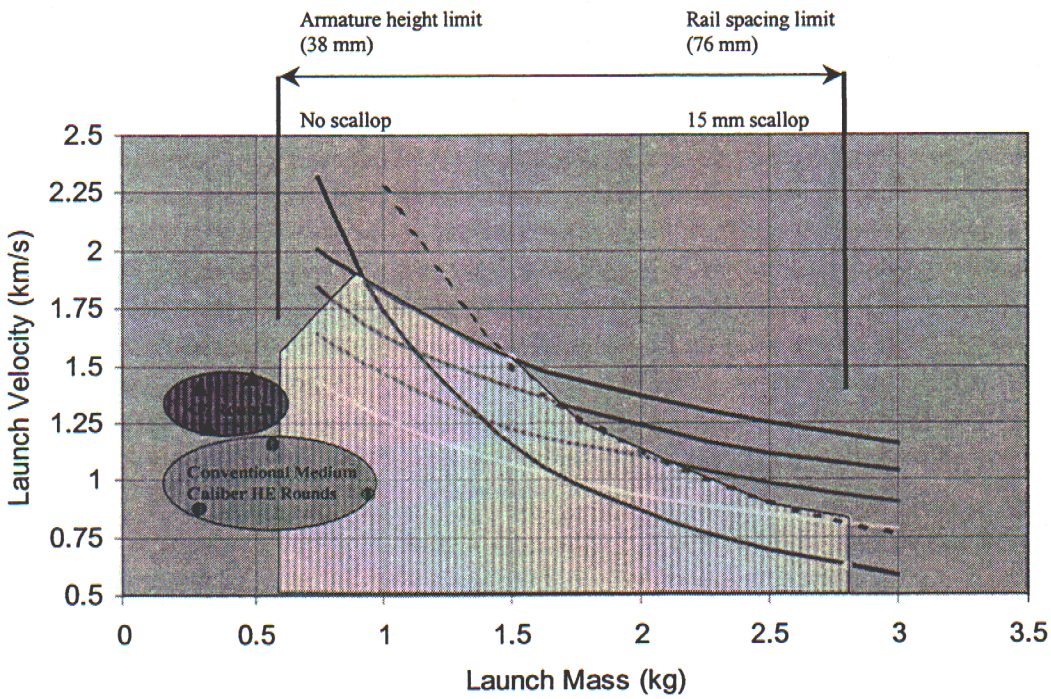


Figure 5. Trade space for removing material from the bore insulators to accommodate a base diameter larger than the armature height.

## 5. Conclusions

The bore cross section used to initiate the assessment for the MsHE configuration was developed based on a kinetic energy penetrator requirement. The bore is not optimized for an HE round, but it certainly provides for a range of solutions, depending on the amount of material removed from the bore insulators. The amount of material varies from 0 to roughly 15 mm (as indicated by the horizontal arrow in Figure 5) and is not limited by any fundamental processes. Furthermore, the modification to the insulator does not preclude operation, nor does it degrade the performance of the (required) kinetic energy penetrator. Further system-level trades can be made between the armor penetration at range, which favors the lower bound (38 mm), and the HE payload, which favors the upper bound (76 mm). In any event, the MsHE round for a rectangular bore cross section provides an increased capability, compared to conventionally launched HE rounds (25 mm–40 mm) in velocity (1.5 km/s vs. 1.1 km/s), armor penetration, (25 mm vs. 15 mm) and HE payload (650 g vs. 113 g).

Details regarding the pulsed power system are essential for evaluating the propulsion requirements. Also, details of the insulator modification are necessary to evaluate the impact (if any) on the launcher containment structure.

## 6. References


1. Zielinski, A. "Integrated Launch Package Design With Considerations for Reduced Scale Demonstration." U.S. Army Research Laboratory, Aberdeen Proving Ground, MD, to be published.
2. Zielinski, A. "End State Integrated Launch Package Design as a Basis for Assessing Augmentation." IAT Technical Note, IAT.TN 0180, March 2000.
3. Bofors Weapons System. *Programmable 40 mm All-Target Ammunition Brochure.* PB-01-485-E-1.
4. Johnson, W., W. Baker, B. Rodin, and L. Puckett. "An Exploratory Analysis of the Effectiveness of the Bofors 40 mm Proximity Fuzed Shell and Impact-Fuzed Shell Against the Mig-21F Aircraft." BRL-MR-2611, U.S. Army Ballistic Research Laboratories, Aberdeen Proving Ground, MD, April 1976.
5. Moshier, G. Personal communication. U.S. Army TARDEC-ARDEC, Picatinny Arsenal, NJ, July 2000.
6. Konick, W. Personal communication. U.S. Army TARDEC-ARDEC, U.S. Army Research Laboratory, Adelphi, MD, July 2000.
7. Kitzmiller, J. Results presented at the SEIT Meeting, Austin, TX, 5 July 2000.
8. Zielinski, A., and J. Garner. "Mass Stabilized Projectile Designs for Electromagnetic Launch." *IEEE Transactions on Magnetics*, vol. 27, January 1991.
9. Statton, E. S., A. Alexander, and R. Dethlefsen. "Firings of Tactically-Configured Air-Defense Projectiles From a 90-mm Electromagnetic Railgun." *IEEE Transactions on Magnetics*, vol. 31, January 1995.
10. Zielinski, A. "In-Bore Magnetic Field Management." ARL-TR-1914, U.S. Army Research Laboratory, Aberdeen Proving Ground, MD, March 1999.
11. Weinacht, P. "Effect of Body Cross-Section on Projectile Aerodynamics Performance With Application to EM Guns." U.S. Army Research Laboratory, Aberdeen Proving Ground, MD, to be published.

INTENTIONALLY LEFT BLANK.

| NO. OF COPIES | ORGANIZATION |
|---|---|
| 2 | DEFENSE TECHNICAL<br>INFORMATION CENTER<br>DTIC OCA<br>8725 JOHN J KINGMAN RD<br>STE 0944<br>FT BELVOIR VA 22060-6218 |
| 1 | HQDA<br>DAMO FDT<br>400 ARMY PENTAGON<br>WASHINGTON DC 20310-0460 |
| 1 | OSD<br>OUSD(A&T)/ODDR&E(R)<br>DR R J TREW<br>3800 DEFENSE PENTAGON<br>WASHINGTON DC 20301-3800 |
| 1 | COMMANDING GENERAL<br>US ARMY MATERIEL CMD<br>AMCRDA TF<br>5001 EISENHOWER AVE<br>ALEXANDRIA VA 22333-0001 |
| 1 | INST FOR ADVNCD TCHNLGY<br>THE UNIV OF TEXAS AT AUSTIN<br>3925 W BRAKER LN STE 400<br>AUSTIN TX 78759-5316 |
| 1 | DARPA<br>SPECIAL PROJECTS OFFICE<br>J CARLINI<br>3701 N FAIRFAX DR<br>ARLINGTON VA 22203-1714 |
| 1 | US MILITARY ACADEMY<br>MATH SCI CTR EXCELLENCE<br>MADN MATH<br>MAJ HUBER<br>THAYER HALL<br>WEST POINT NY 10996-1786 |
| 1 | DIRECTOR<br>US ARMY RESEARCH LAB<br>AMSRL D<br>DR D SMITH<br>2800 POWDER MILL RD<br>ADELPHI MD 20783-1197 |

| NO. OF COPIES | ORGANIZATION |
|---|---|
| 1 | DIRECTOR<br>US ARMY RESEARCH LAB<br>AMSRL CI AI R<br>2800 POWDER MILL RD<br>ADELPHI MD 20783-1197 |
| 3 | DIRECTOR<br>US ARMY RESEARCH LAB<br>AMSRL CI LL<br>2800 POWDER MILL RD<br>ADELPHI MD 20783-1197 |
| 3 | DIRECTOR<br>US ARMY RESEARCH LAB<br>AMSRL CI AP<br>2800 POWDER MILL RD<br>ADELPHI MD 20783-1197 |
| | ABERDEEN PROVING GROUND |
| 2 | DIR USARL<br>AMSRL CI LP (BLDG 305) |

| NO. OF COPIES | ORGANIZATION |
|---|---|
| 1 | DIR FOR THE DIRECTORATE<br>OF FORCE DEVELOPMENT<br>US ARMY ARMOR CTR<br>COL E BRYLA<br>FT KNOX KY 40121-5000 |
| 1 | US ARMY MATERIEL CMD<br>AMC DCG T<br>5001 EISENHOWER BLVD<br>ALEXANDRIA VA<br>22333-0001 |
| 1 | US ARMY MISSILE CMD<br>AMSMI RD<br>DR MCCORKLE<br>REDSTONE ARSENAL AL<br>35898-5240 |
| 2 | US ARMY TACOM TARDEC<br>AMSTA TR D MS 207<br>J CHAPIN<br>M TOURNER<br>WARREN MI 48397-5000 |
| 1 | US ARMY TACOM ARDEC<br>FSAE GCSS TMA BLDG 354<br>J BENNETT<br>PICATINNY ARSENAL NJ<br>07806-5000 |
| 6 | INST FOR ADVANCED TECH<br>UNIV OF TEXAS AT AUSTIN<br>P SULLIVAN<br>F STEPHANI<br>T WATT<br>W REINCKE<br>D BARNETT<br>M ERENGIL<br>3925 W BRAKER LN STE 400<br>AUSTIN TX 78759-5316 |
| 2 | LOCKHEED MARTIN<br>VOUGHT<br>L FARRIS<br>K COOK<br>PO BOX 650003<br>MS WT 21<br>DALLAS TX 75265-0003 |

| NO. OF COPIES | ORGANIZATION |
|---|---|
| 4 | UNIV OF TEXAS AT AUSTIN<br>CENTER FOR ELECT<br>A WALLS<br>J KITZMILLER<br>S PRATAP<br>J PAPPAS<br>PRC MAIL CODE R7000<br>AUSTIN TX 78712 |
| 1 | INST FOR DEFENSE<br>ANALYSIS<br>I KOHLBERG<br>1801 N BEAUREGARD ST<br>ALEXANDRIA VA 22311 |
| 1 | KAMAN<br>ELECTROMAGNETICS CORP<br>P MONGEAU<br>2 FOX RD<br>HUDSON MA 01749 |
| 2 | UNIV AT BUFFALO<br>SUNY AB<br>J SARJEANT<br>PO BOX 601900<br>BUFFALO NY 14260-1900 |
| 3 | UDLP<br>B GOODELL<br>R JOHNSON<br>MS M170<br>4800 EAST RIVER RD<br>MINNEAPOLIS MN<br>55421-1498 |
| 1 | UNIV OF TEXAS AT AUSTIN<br>M DRIGA<br>ENS 434 DEPT OF ECE<br>MC 60803<br>AUSTIN TX 78712 |
| 1 | SAIC<br>G CHRYSSOMALLIS<br>3800 WEST 80TH ST<br>STE 1090<br>BLOOMINGTON MN<br>55431 |

| NO. OF COPIES | ORGANIZATION |
|---|---|
| 1 | SAIC<br>J BATTEH<br>4901 OLDE TOWNE PKWY<br>STE 200<br>MARIETTA GA 30068 |
| 1 | SAIC<br>K A JAMISON<br>1247 B N EGLIN PKWY<br>SHALIMAR FL 32579 |
| 2 | IAP RESEARCH INC<br>D BAUER<br>J BARBER<br>2763 CULVER AVE<br>DAYTON OH 45429-3723 |
| 3 | MAXWELL TECHNOLOGIES<br>P REIDY<br>T WOLFE<br>9244 BALBOA AVE<br>SAN DIEGO CA 92123 |
| 1 | NORTH CAROLINA STATE UNIV<br>DEPT OF NUCLEAR ENGR<br>M BOURHAM<br>BOX 7909<br>RALEIGH NC 27695-7909 |
| 1 | MAXWELL PHYSICS<br>INTERNATIONAL<br>C GILMAN<br>2700 MERCED ST<br>PO BOX 5010<br>SAN LEANDRO CA 94577-0599 |
| 1 | ATA ASSOCIATES<br>W ISBELL<br>PO BOX 6570<br>SANTA BARBARA CA<br>93160-6570 |

| NO. OF COPIES | ORGANIZATION |
|---|---|
| | ABERDEEN PROVING GROUND |
| 22 | DIR USARL<br>AMSRL B<br>A HORST<br>A TANNER<br>B FORCH<br>D LYON<br>AMSRL WM<br>E SCHMIDT<br>AMSRL WM BC<br>P PLOSTINS<br>J GARNER<br>V OSKAY<br>M BUNDY<br>G COOPER<br>J SAHU<br>P WEINACHT<br>H EDGE<br>B GUIDOS<br>A ZIELINSKI<br>D WEBB<br>K SOENCKSEN<br>S WILKERSON<br>T ERLINE<br>J NEWILL<br>M DELGUERCIO<br>AMSRL WM WD<br>J POWELL |

INTENTIONALLY LEFT BLANK.

# REPORT DOCUMENTATION PAGE

*Form Approved*
*OMB No. 0704-0188*

Public reporting burden for this collection of information is estimated to average 1 hour per response, including the time for reviewing instructions, searching existing data sources, gathering and maintaining the data needed, and completing and reviewing the collection of information. Send comments regarding this burden estimate or any other aspect of this collection of information, including suggestions for reducing this burden, to Washington Headquarters Services, Directorate for Information Operations and Reports, 1215 Jefferson Davis Highway, Suite 1204, Arlington, VA 22202-4302, and to the Office of Management and Budget, Paperwork Reduction Project(0704-0188), Washington, DC 20503.

| 1. AGENCY USE ONLY *(Leave blank)* | 2. REPORT DATE | 3. REPORT TYPE AND DATES COVERED |
|---|---|---|
| | May 2001 | May 2000–July 2000 |

**4. TITLE AND SUBTITLE**
Examination of a High-Explosive Round for a High-Aspect Ratio Railgun Bore

**5. FUNDING NUMBERS**
AH80

**6. AUTHOR(S)**
Alexander Zielinski

**7. PERFORMING ORGANIZATION NAME(S) AND ADDRESS(ES)**
U.S. Army Research Laboratory
ATTN: AMSRL-WM-BC
Aberdeen Proving Ground, MD 21005-5066

**8. PERFORMING ORGANIZATION REPORT NUMBER**
ARL-MR-513

**9. SPONSORING/MONITORING AGENCY NAMES(S) AND ADDRESS(ES)**

**10. SPONSORING/MONITORING AGENCY REPORT NUMBER**

**11. SUPPLEMENTARY NOTES**

**12a. DISTRIBUTION/AVAILABILITY STATEMENT**
Approved for public release; distribution is unlimited.

**12b. DISTRIBUTION CODE**

**13. ABSTRACT** *(Maximum 200 words)*

A railgun bore with a rectangular cross section is advantageous for launching a hypervelocity kinetic energy penetrator. An analysis is presented that supports the operation of a mass-stablized round with a high-explosive (HE) payload from the same bore. The design criteria and two bounding cases are provided to illustrate the effectiveness. Modifications to the bore insulators, ranging from 0 to 15 mm, can provide space for the projectile base diameter. The resultant HE round provides an increased capability, compared to conventionally launched HE rounds in velocity, armor penetration, and payload capacity.

**14. SUBJECT TERMS**
high-explosive round, railgun

**15. NUMBER OF PAGES**
20

**16. PRICE CODE**

| 17. SECURITY CLASSIFICATION OF REPORT | 18. SECURITY CLASSIFICATION OF THIS PAGE | 19. SECURITY CLASSIFICATION OF ABSTRACT | 20. LIMITATION OF ABSTRACT |
|---|---|---|---|
| UNCLASSIFIED | UNCLASSIFIED | UNCLASSIFIED | UL |

NSN 7540-01-280-5500

Standard Form 298 (Rev. 2-89)
Prescribed by ANSI Std. 239-18 298-102

INTENTIONALLY LEFT BLANK.

## USER EVALUATION SHEET/CHANGE OF ADDRESS

This Laboratory undertakes a continuing effort to improve the quality of the reports it publishes. Your comments/answers to the items/questions below will aid us in our efforts.

1. ARL Report Number/Author ARL-MR-513 (Zielinski) Date of Report May 2001

2. Date Report Received _____

3. Does this report satisfy a need? (Comment on purpose, related project, or other area of interest for which the report will be used.) _____

4. Specifically, how is the report being used? (Information source, design data, procedure, source of ideas, etc.) _____

5. Has the information in this report led to any quantitative savings as far as man-hours or dollars saved, operating costs avoided, or efficiencies achieved, etc? If so, please elaborate. _____

6. General Comments. What do you think should be changed to improve future reports? (Indicate changes to organization, technical content, format, etc.) _____

CURRENT ADDRESS

Organization

Name E-mail Name

Street or P.O. Box No.

City, State, Zip Code

7. If indicating a Change of Address or Address Correction, please provide the Current or Correct address above and the Old or Incorrect address below.

OLD ADDRESS

Organization

Name

Street or P.O. Box No.

City, State, Zip Code

(Remove this sheet, fold as indicated, tape closed, and mail.)

**(DO NOT STAPLE)**

DEPARTMENT OF THE ARMY

OFFICIAL BUSINESS

NO POSTAGE
NECESSARY
IF MAILED
IN THE
UNITED STATES

# BUSINESS REPLY MAIL

FIRST CLASS PERMIT NO 0001,APG,MD

POSTAGE WILL BE PAID BY ADDRESSEE

DIRECTOR
US ARMY RESEARCH LABORATORY
ATTN AMSRL WM BC
ABERDEEN PROVING GROUND MD 21005-5066