ARMY RESEARCH LABORATORY

Flight Demonstration Results of a Two-way Robust Acquisition of Data (2-RAD) System

by Marshal A. Childers

ARL-TR-3103 **January 2004**

Approved for public release; distribution is unlimited.

NOTICES

Disclaimers

The findings in this report are not to be construed as an official Department of the Army position unless so designated by other authorized documents.

Citation of manufacturer's or trade names does not constitute an official endorsement or approval of the use thereof.

DESTRUCTION NOTICE—Destroy this report when it is no longer needed. Do not return it to the originator.

Army Research Laboratory
Aberdeen Proving Ground, MD 21005-5069

ARL-TR-3103 **January 2004**

Flight Demonstration Results of a Two-way Robust Acquisition of Data (2-RAD) System

Marshal A. Childers
Weapons and Materials Research Directorate, ARL

Approved for public release; distribution is unlimited.

REPORT DOCUMENTATION PAGE

Form Approved
OMB No. 0704-0188

Public reporting burden for this collection of information is estimated to average 1 hour per response, including the time for reviewing instructions, searching existing data sources, gathering and maintaining the data needed, and completing and reviewing the collection information. Send comments regarding this burden estimate or any other aspect of this collection of information, including suggestions for reducing the burden, to Department of Defense, Washington Headquarters Services, Directorate for Information Operations and Reports (0704-0188), 1215 Jefferson Davis Highway, Suite 1204, Arlington, VA 22202-4302. Respondents should be aware that notwithstanding any other provision of law, no person shall be subject to any penalty for failing to comply with a collection of information if it does not display a currently valid OMB control number.

PLEASE DO NOT RETURN YOUR FORM TO THE ABOVE ADDRESS.

1. REPORT DATE *(DD-MM-YYYY)*	2. REPORT TYPE	3. DATES COVERED (From - To)
January 2004	Final	October 2002 to October 2003

4. TITLE AND SUBTITLE

Flight Demonstration Results of a Two-way Robust Acquisition of Data (2-RAD) System

5a. CONTRACT NUMBER

5b. GRANT NUMBER

5c. PROGRAM ELEMENT NUMBER

6. AUTHOR(S)

Marshal A. Childers (ARL)

5d. PROJECT NUMBER

1L162618H80

5e. TASK NUMBER

5f. WORK UNIT NUMBER

7. PERFORMING ORGANIZATION NAME(S) AND ADDRESS(ES)

U.S. Army Research Laboratory
Weapons and Materials Research Directorate
Aberdeen Proving Ground, MD 21005-5069

8. PERFORMING ORGANIZATION REPORT NUMBER

ARL-TR-3103

9. SPONSORING/MONITORING AGENCY NAME(S) AND ADDRESS(ES)

10. SPONSOR/MONITOR'S ACRONYM(S)

11. SPONSOR/MONITOR'S REPORT NUMBER(S)

12. DISTRIBUTION/AVAILABILITY STATEMENT

Approved for public release; distribution is unlimited.

13. SUPPLEMENTARY NOTES

14. ABSTRACT

This report describes a joint effort between the U.S. Army Research Laboratory (ARL), the John Hopkins Applied Physics Laboratory (APL), and Yuma Proving Ground (YPG), which was funded by the Central Test and Evaluation Investment Program to extend the wireless local area network approach to munition testing. The objective of this two-way robust acquisition of data (2-RAD) system program was to design, produce, and demonstrate in flight an instrumented 2.75-inch diameter rocket warhead system that integrates commercial off-the-shelf network hardware to demonstrate the feasibility of wireless two-way communication on board a munition. Five instrumented warheads were produced, and two of these were flight demonstrated at Rocket Alley, YPG. The results of this experiment mark the first successful wireless two-way network communication on a munition.

15. SUBJECT TERMS

HYDRA-70; IEEE 802.11b; network; rocket; two-way communication; 2-RAD

16. SECURITY CLASSIFICATION OF:			17. LIMITATION OF ABSTRACT	18. NUMBER OF PAGES	19a. NAME OF RESPONSIBLE PERSON
a. REPORT	b. ABSTRACT	c. THIS PAGE			Marshal A. Childers
UNCLASSIFIED	UNCLASSIFIED	UNCLASSIFIED	UL	50	19b. TELEPHONE NUMBER (*Include area code*) 410-306-0717

Standard Form 298 (Rev. 8/98)
Prescribed by ANSI Std. Z39.18

Contents

List of Figures iv

List of Tables iv

Acknowledgments v

1. Introduction 1

2. 2-RAD Telemetry System 1

2.1 Components Description 2

3. Mechanical Design and Structural Analysis 3

3.1 Power Budget 3

3.2 Mechanical Packaging 4

4. Flight Demonstration Description and Results 10

5. Conclusion 12

6. References 13

Appendix A. Electrical Wiring Diagram 14

Appendix B. Mechanical Drawing 17

Appendix C. Projectile Trajectory Prediction Graph 37

Distribution List 39

List of Figures

Figure 1. Housing assembly model. 5
Figure 2. Fully assembled warhead attached to an inert MK66 rocket motor. 5
Figure 3. System components assembly. 7
Figure 4. Computer assembly. 7
Figure 5. Slot in warhead for camera. 8
Figure 6. Camera mount. 8
Figure 7. Fully assembled 2-RAD warhead mounted on shock test system. 9
Figure 8. 2-RAD projectile in pre-flight evaluation configuration at Rocket Alley. 11
Figure 9. Launch of the 2-RAD projectile. 12

List of Tables

Table 1. Manufacturer power specifications for 2-RAD prototype system components. 3
Table 2. Mass and inertial properties of 2-RAD instrumented warhead CAD model. 10

Acknowledgments

The author thanks Robert Bamberger, Cash Costello, George Barrett, and Dr. William D'Amico of the Johns Hopkins University Applied Physics Laboratory, and Mark Lauss of Yuma Proving Ground (YPG), Arizona, for their contributions in component selection, software programming, and support of the flight demonstration. Charles Ramsdell of YPG contributed to the success of this effort by his support during the flight demonstration. Gordon Brown of the U.S. Army Research Laboratory (ARL) is thanked for his expertise and support during the planning, "ruggedization," assembly, and flight demonstration phases of this project. Mike Nair of ARL is greatly appreciated for his work in troubleshooting the system, supporting the assembly and flight demonstration of the rocket prototypes, and his careful technical review of this report. The efforts of Jaime King and John McLaughlin of Dynamic Sciences, Inc. (DSI) were essential to the success of the system component integration. Robert Wert of the Oak Ridge Institute for Science and Education went beyond the call of duty to apply his radio frequency expertise in support of the system troubleshooting. The author thanks Fred Brandon of DSI for providing the projectile trajectory simulation results. Melvin Ridgely of ARL provided logistic support during the assembly and shipping of the projectiles. The consultation of Ed Bukowski of DSI about battery power and recharging is greatly appreciated. John Condon of ARL is thanked for his consultation on the mechanical design of the 2-RAD warhead.

INTENTIONALLY LEFT BLANK.

1. Introduction

Two-way robust acquisition of data (2-RAD) is an attempt to establish a two-way wireless communication system on a munition. Future combat systems will apply a networked structure for platforms and munitions (nodes) so that multiple assets will simultaneously communicate among each other. Traditional telemetry requires a portion of the radio frequency (RF) spectrum to be reserved for long periods of time. In an operational scenario with numerous assets, there is not sufficient spectrum to support telemetry that requires multiple extended reservations of RF spectrum. To solve this problem, the concept of using an Institute of Electrical and Electronics Engineers (IEEE) 802.11b wireless local area network (WLAN) is posed so that all nodes in the infrastructure can send, receive, and relay data by making relatively short reservations. The WLAN approach is also beneficial in that the use of wireless repeater stations (ground nodes) and access points (connected to wired networks) can extend the range of wireless communication for munitions.

This report describes a joint effort between the U.S. Army Research Laboratory (ARL), the John Hopkins Applied Physics Laboratory (APL), and Yuma Proving Ground (YPG), which was funded by the Central Test and Evaluation Investment Program to extend the WLAN approach to munition testing. The objective of this work was to design, produce, and test in flight an inexpensive instrumented 2.75-inch diameter rocket warhead to assess the feasibility of two-way wireless network communications on board a munition. APL was responsible for selecting and functionally evaluating the warhead system components, supporting the flight experiment, and reducing the data. ARL was responsible for designing and manufacturing the warhead mechanical hardware, integrating the system components, "ruggedizing" the munition, assembling the prototype, supporting the pre-flight system troubleshooting, and assisting during the flight experiment. YPG was responsible for supporting the flight experiment.

2. 2-RAD Telemetry System

The 2-RAD telemetry system applies wireless communication technology that is available from commercial off-the-shelf (COTS) products. This technology is based on the IEEE 802.11b standard in which a wireless radio generates a 2.4-gigahertz (GHz) carrier wave (2.4 to 2.483 GHz) that is modulated to achieve a data transfer rate of 1, 2, 5.5, or 11 megabits per second (Mbps). The system of wireless transceivers can be operated in an independent configuration or in an infrastructure configuration. In the independent configuration, known as the *ad hoc* configuration, the system nodes communicate directly to each other, and no fixed transceivers are required. In the infrastructure configuration, the nodes communicate to fixed

access points (APs) that typically distribute data through a wired connection. For more information about IEEE 802.11b, consult the standard (*1*).

Component selection for the 2-RAD system was driven by the vehicle geometry (2.75-inch diameter rocket), the desired data medium (video), and the need to use COTS components. The usable payload space of the rocket warhead and the interface requirements for an IEEE 802.11b wireless radio card, a computer, and a universal serial bus (USB)-compatible camera limited the number of acceptable components for selection. The mechanical packaging of the selected components is detailed in the next section of this report. The rocket payload consists of a single board computer, an IEEE 802.11b wireless card, a 0.5-watt amplifier, a USB-compatible camera, and a 2.4-GHz antenna. Except for the antenna and two voltage converters, all the 2-RAD system components were COTS products.

2.1 Components Description

The selected camera used to obtain data for verification of two-way communication is a Logitech QuickCam[1] for Notebooks Pro with a maximum 640x480 resolution and maximum frame rate of 30 frames per second. A USB port is used to send data, provide power, and control the zoom feature.

The IEEE 802.11b wireless radio is a Linksys[2] instant wireless network access point (WAP11) card that has two connectors for external antennas. This card can be configured as an access point or as a client (node), supports 11 Mbps data transfer, has 63 milliwatts (mW) transmit power, and -84 decibels referred to 1 milliwatt (dBm) receiver sensitivity.

The single board computer is a CompuLab 586CORE[3] with a 133-MHz AMD Elan[4] SC520 X-86 compatible processor, 64-megabyte (MB) flash memory, a 100/10BaseT ethernet port, and a USB host port. The operating system for the computer is Red Hat Linux 7.0[5]. To connect the single board computer to the camera and the wireless radio card, APL designed and produced two mezzanine boards. These printed circuit boards physically connect to the 90-pin connectors on the single board computer and provide power connections to the computer and camera, enable USB communications with the camera, and enable ethernet communications to the Linksys WAP11 card.

The selected amplifier is a Teletronics[6] SmartAmp 2.4-GHz series 500-mW amplifier. This device has an operating range of 2.4 to 2.5 GHz, 200 mW of maximum transmit input power, as much as 24 dB transmit gain, and 14 dB typical receive gain.

---

[1] Logitech® and QuickCam® are registered trademarks of Logitech, Inc., 6505 Kaiser Drive, Freemont CA 94555.
[2] Linksys® is a registered trademark of Linksys, 17401 Armstrong Ave., Irvine CA 92614.
[3] CompuLab™ and 586CORE™ are trademarks of CompuLab Ltd., Malat Bldg., Technion, Haifa Israel.
[4] Elan™ is a trademark of Advanced Micro Devices, One AMD Place, Sunnyvale CA 94088.
[5] Red Hat, 1801 Varsity Drive, Raleigh NC 27606.
[6] Teletronics® is a registered trademark of Teletronics International, Inc., 1803 Research Blvd. Suite 204, Rockville MD 20850.

The antenna is a 2.4-GHz, 4.9-dBi (decibels referenced to an isotropic radiator) gain, circular patch antenna that was provided by the Naval Air Warfare Center Weapons Division.

3. Mechanical Design and Structural Analysis

3.1 Power Budget

The prototype system was designed for flight experimentation on a 2.75-inch rocket with a flight time of approximately 25 seconds. Considering the additional time required for pre-flight turn-on and function checks, the power system was designed to produce 30 minutes of continuous operation. The power specifications for each system component are listed in table 1.

Table 1. Manufacturer power specifications for 2-RAD prototype system components.

Device	Power (W)	Voltage (V)	Maximum Current (mA)
Compulab 586CORE Single Board Computer	4.3	3.3	1303
Linksys WAP11 Access Point Card	12.5	5	2500
Teletronics 500 mW SmartAmp	4.9	7.5	653
Logitech Quickcam Camera	0.5	5	100

Lithium ion batteries with a nominal voltage of 3.7 volts and 640 milliampere (mA) hours standard capacity, which are typically used as replacements for Canon[7] digital camera batteries, were selected to provide power to the system. These batteries have previously shown good discharge characteristics and can endure the launch and flight of a 2.75-inch rocket (*2*). Table 1 shows that the system requires three different voltages. The manufacturer specifications for the Linksys WAP11 card indicate a 2.5-ampere current requirement, but bench testing at APL revealed that the card intermittently draws approximately 2 amperes. Power regulation to the Linksys WAP11 card was accomplished with a DC-to-DC voltage-converting printed circuit board (PCB) designed by ARL, which supplied 5 volts at a maximum of 3 amperes. The 3.3 volts supplied to the computer were regulated by a LMS1585AIT-3.3-volt National Semiconductor[8] low dropout fast response regulator. The 5 volts to the camera were achieved by a single DC-to-DC voltage-converting PCB that was designed by ARL and similar to the one used in a previous ARL flight demonstration (*2*) to provide 5 volts to a mezzanine card that forwards power to the camera by the USB cable. Power to the three regulator boards was supplied by six batteries in a 2-series, 3-parallel configuration to provide a nominal 7.4 volts with approximately 1,900 mA hours capacity. According to the manufacturer of the amplifier,

[7]Canon U.S.A., Inc., One Canon Plaza, Lake Success NY 11042.

[8]National Semiconductor Corporation, 2900 Semiconductor Dr., Santa Clara, CA 95052-8090.

this device is self-regulating, the nominal 7.5 volts are the minimum required voltage, and a supply of 9 to 12 volts is recommended. Therefore, two batteries in series were used to supply an unregulated nominal 11.1 volts at approximately 640 mA hours to the amplifier. Battery power was introduced to the system components through a manual turn-on switch. An electrical wiring diagram of the 2-RAD system is shown in appendix A of this report.

3.2 Mechanical Packaging

ARL was tasked to design a warhead to house the 2-RAD prototype system components. The design intent was to 1) incorporate required COTS components into a 2.75-inch diameter HYDRA[9]-70 rocket warhead that is compatible with the M261 lightweight launcher, 2) provide a modular or accessible payload, 3) place the antenna forward of the rocket launcher, 4) provide for warhead attachment to a standard MK66 rocket motor, and 5) ensure component and system integrity during expected operational conditions. Five warhead assemblies were manufactured.

To provide access to system components for the purpose of pre-flight troubleshooting, the warhead assembly consisted of a mounting plate that inserted into a housing tube. The hardware for the 2-RAD system was modeled with SolidWorks[10] computer-aided design (CAD) software to facilitate the design layout and provide mass and inertial properties approximations. Figure 1 is a CAD–generated diagram of the housing and component assembly. Mechanical drawings of the warhead hardware are shown in appendix B of this report.

The warhead housing was designed to accommodate the selected COTS components for the 2-RAD system. The housing was machined from 6061-T6 aluminum stock of 3.5-inch outside diameter and 1.5-inch inside diameter. Given that the width of the Linksys WAP11 card exceeded 2.8 inches, the warhead section that housed this component required a 2.9-inch inside diameter. In order for the warhead to fit into the rocket launcher, the Linksys WAP11 card was situated in the front of the warhead so that the front section of the warhead protruded from the launcher when the rocket assembly was placed in launch position. The outside diameter of the front section was 3.25 inches (see figure 1). The middle section was designed with a 2.5-inch inside diameter and 2.75-inch outside diameter. The rear section of the housing tube was machined to a 2.75-inch outside diameter, and the stock 1.5-inch inside diameter of this section was unchanged. The warhead total length was 39.75 inches. Figure 2 shows a fully assembled warhead attached to an inert MK66 rocket motor. Stress approximations were made for the front section wall and middle section wall, assuming a 100-g acceleration on a warhead weighing 12.2 pounds. The calculated compressive stresses predicted that the walls could survive the expected launch event. To provide for attaching the warhead to the rocket motor, Acme threads (for thread details, see drawing in appendix B) were machined at the rear-most portion of the housing tube.

[9]Not an acronym
[10]SolidWorks Corporation, 300 Baker Avenue, Concord MA 01742.

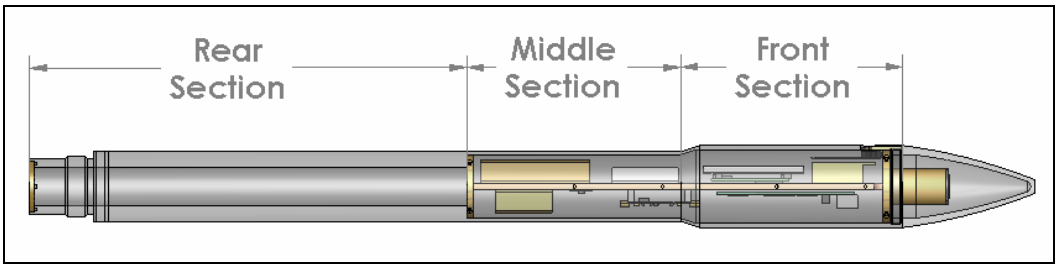

Figure 1. Housing assembly model.

Figure 2. Fully assembled warhead attached to an inert MK66 rocket motor.

The mounting plate was machined from 7075-T6 aluminum plate stock to 0.22 inch thickness. The plate was supported in the housing tube by bulkheads at each end and by set screws. Photographs of an assembled mounting plate with the system components attached are shown in figure 3. The front bulkhead served a dual purpose as an antenna mount. The antenna was

mounted to the bulkhead with 1-72 unified coarse thread series (UNC) screws. A semi-rigid coaxial cable was used to connect the antenna to the amplifier. Machined 7075-T6 aluminum "standoffs" and 4-40 UNC screws were used to attach the amplifier to the mounting plate (for stand-off drawings, see appendix B). The Linksys WAP11 card was mounted to the plate by 4-40 mounting screws and Nylon standoffs. A flexible coaxial cable connected the amplifier to the Linksys WAP11 card. An ethernet crossover cable was used to connect the Linksys WAP11 card to the single board computer with wires on one end that were soldered to the card and an RJ45 connector on the other end that was soldered to the mating connector of a mezzanine board. The two mezzanine boards and the single board computer were mounted to the plate with a frame machined from 0.23-inch-thick polycarbonate sheet stock. A photograph of the computer assembly is shown in figure 4. The following assembly steps were applied to ensure alignment of the 51-pin connectors on the mezzanine boards with those on the single board computer. First, the mezzanine boards were loosely fastened to the polycarbonate frame by 4-40 UNC screws and nuts. Next, the connectors on the single board computer were pressed onto the mezzanine board connectors and the screws were tightened. Finally, a 2.5-inch by 4-inch section of 0.060-inch-thick elastic material was cut from stock E•A•R[11] Specialty Composites C-1002-06PSA and placed under the computer board, and the assembly was fastened to the mounting plate by 4-40 UNC screws.

Two packaging requirements drove the mounting design for the camera. First, the camera field of view must be maximized. Second, to maintain a modular approach, the mounted camera must permit removal of the system components after assembly. Both requirements were met by placement of the lens in the warhead wall and placement of the camera in a side-look orientation. The camera lens was placed within 0.020 inch of the outer surface of the warhead wall by a slot machined in the warhead front section (see figure 5). This slot permitted removal of the mounting plate with the camera attached. A 7075-T6 aluminum block was used to mount the camera to the plate. Mounting screws (0-80 UNF) and a combination of aluminum and Nylon spacers held the camera to the block, and 4-40 UNC screws were used to attach the block to the mounting plate (figure 6).

The two battery configurations were each packaged in cases that were machined from 7075-T6 aluminum. Each battery case had 0.100-inch wall thickness and was secured to the mounting plate by 4-40 UNC screws. To secure the batteries within the battery cases and provide electrical insulation, a thin layer of Mylar[12] material was formed around the battery packs before they were inserted into the cases.

[11]energy-absorbing resins; E-A-R® is a registered trademark of Specialty Composites, 7911 Zionsville Road, Indianapolis, IN 46268.
[12]Mylar® is a registered trademark of E. I. DuPont de Nemours & Co., Inc.

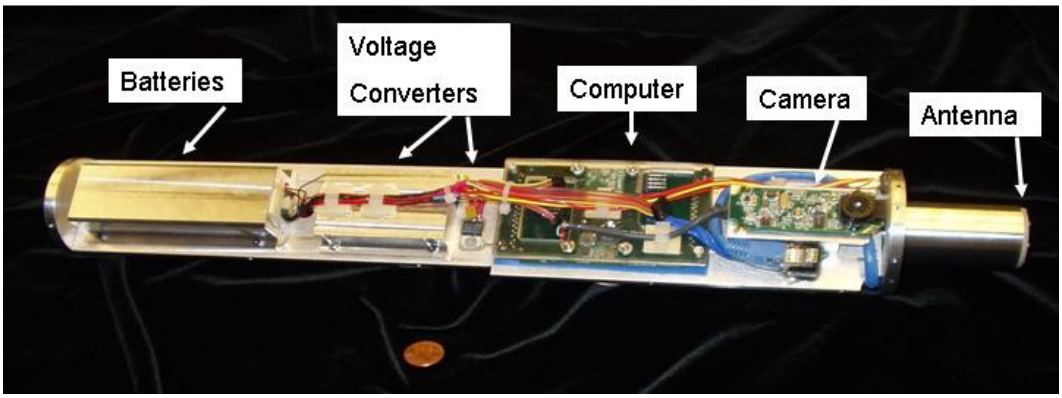

a. camera side

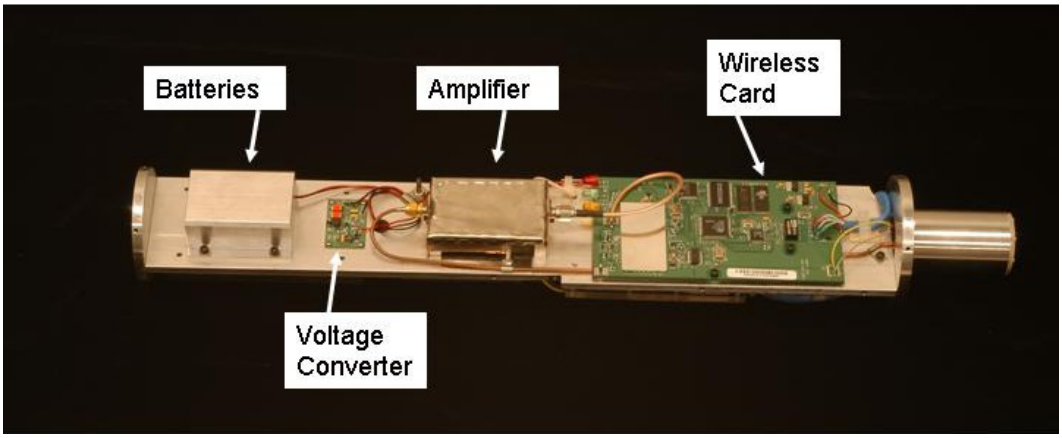

b. wireless card side

Figure 3. System components assembly.

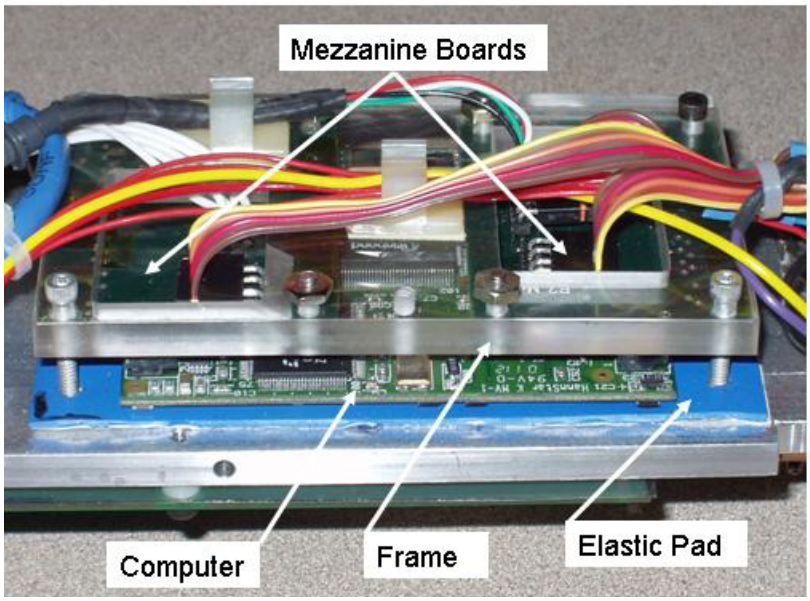

Figure 4. Computer assembly.

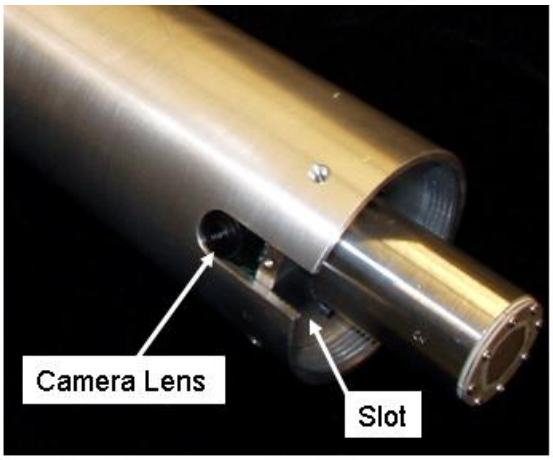

Figure 5. Slot in warhead for camera.

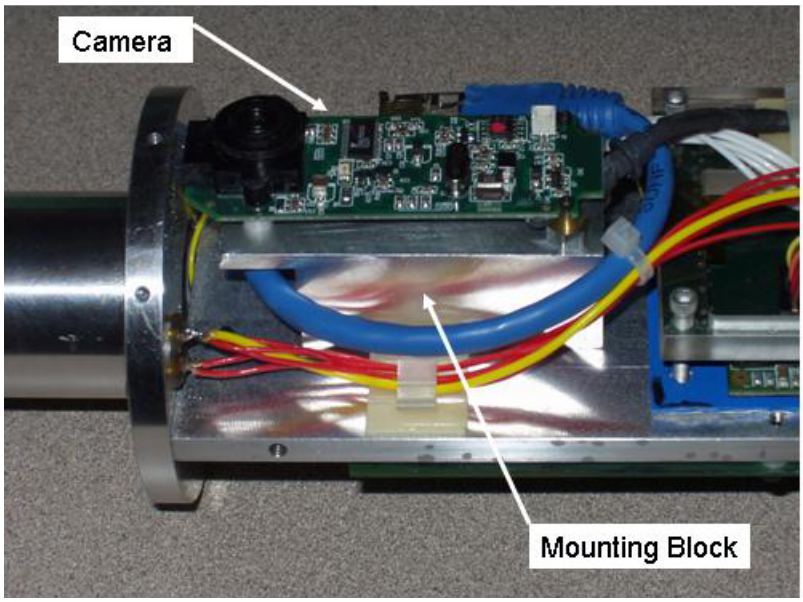

Figure 6. Camera mount.

To assess the rocket launch survivability of the system, selected components and full 2-RAD warhead assemblies were tested with an MTS[13] shock test system. The shock test system was used to apply a simulated launch maximum acceleration of 100 g to the camera and computer and 85 g to the assemblies. Each test item was secured to the shock table with mounts that were machined from 7075-T6 aluminum. Figure 7 shows the fully assembled 2-RAD warhead mounted on the shock test system. Further detail about using this shock test system to assess munition component survivability is given in a previous report (*3*). As a result of the shock testing of the camera and computer, no degradation of performance or structural integrity was detected in these components. Shock survivability testing was also performed on two fully

[13]Not an acronym; MTS Systems Corporation, 14000 Technology Dr., Eden Prairie, MN 55344-2290.

assembled warheads. The first tested unit was evaluated for structural integrity only. This warhead was exposed to a shock with a maximum acceleration of 85 g. Visual inspection of each component, all mounting hardware, and the warhead structure revealed that no structural degradation occurred from the shock. A second warhead assembly was shock tested twice at a maximum acceleration of 85 g. During the first shock event, the unit was tested with battery power supplied and the Linksys WAP11 card configured as a client. System power was monitored with a Cisco[14] Aironet 350 personal computer memory card international (PCMCIA) client adapter connected to a 2.2-dBi omnidirectional antenna to verify that the Linksys WAP11 card on the 2-RAD system remained active. No two-way data link was attempted for this shock experiment. The power remained on during and after the shock event. The same unit was tested a second time with the Linksys card configured as a client and the system powered by the batteries. A link was established with a nearby Linksys WAP11 card that was configured as an AP and connected to a 2.2-dBi diversity omnidirectional antenna system. The two-way communication link was maintained during and after the second shock event, and no structural degradation was visually detected in the components, mounting hardware, or warhead structure.

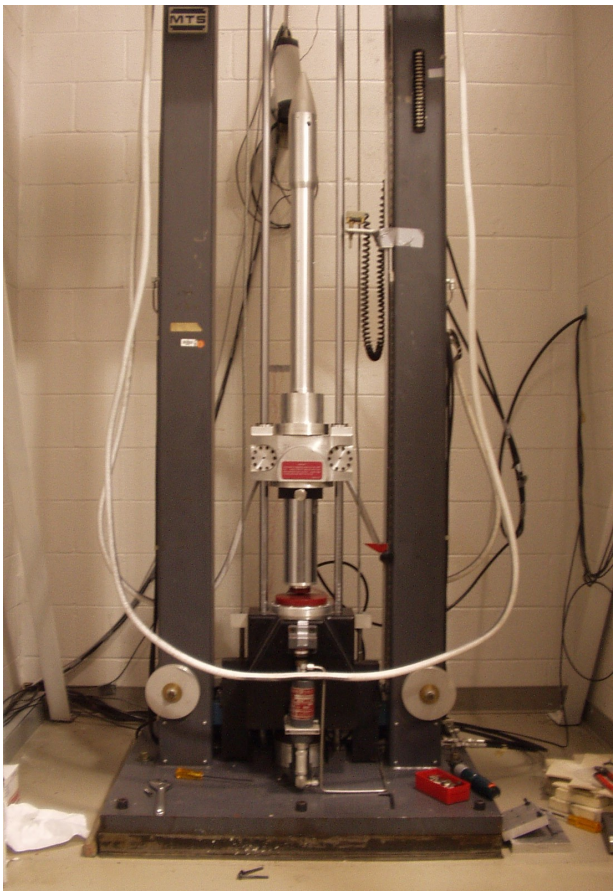

Figure 7. Fully assembled 2-RAD warhead mounted on shock test system.

[14]Cisco Systems, Inc., 170 West Tasman Dr., San Jose CA 95134.

Flight trajectory prediction for the instrumented warhead was made with interior ballistic and trajectory simulation software to quantify the flight stability of the projectile (*4*). Aeroballistic properties of this custom warhead were not matched to any fielded tactical or training warhead. The mass and inertial properties used as input to the trajectory code are listed in table 2. The center of mass dimensions listed in the table are referenced from the interface of the warhead and the rocket motor.

Results of the flight trajectory prediction are given in appendix C of this report.

Table 2. Mass and inertial properties of 2-RAD instrumented warhead CAD model.

Mass (pounds)	Principal moment of inertia-x (pounds-inch^2)	Principal moment of inertia-y (pounds-inch^2)	Principal moment of inertia-z (pounds-inch^2)	Center of mass-x (inches)	Center of mass-y (inches)	Center of mass-z (inches)
12.128	15.230	1294.009	1294.439	14.42393621	0.00001781	0.02580386

4. Flight Demonstration Description and Results

The flight experiments were held at the Rocket Alley test area of YPG in which two rockets were fired on September 18, 2003.

The transceivers used to send and receive data with the rocket consisted of Linksys WAP11 cards that were configured as clients. This configuration was chosen because pre-flight link attempts revealed that the system established a more consistent link when the rocket was configured as an AP and the transceivers were configured as clients. Four of the transceivers were placed at various sites on Rocket Alley: Site 1 was 75 feet to the left of the rocket launcher and used a diversity 2.2-dBi omnidirectional antenna system; Site 2 was approximately 900 feet down range (along the flight path) from the launcher and used an 11-dBi gain omnidirectional antenna on a 10-foot mast; Site 3 was approximately 1,900 feet down range (along the flight path) and used an 11-dBi omnidirectional antenna on a 10-foot mast; Site 5 was approximately 6 km down range and 1 km to the right of the flight path and used a 23-dBi parabolic antenna on a 50-foot mast. The primary data to be transferred over the link between that rocket and the transceivers were camera control messages (ground to munition communication) and digitized camera video (munition to ground communication). Link and timing information was monitored at three sites by laptop computers that were each equipped with a Cisco Aironet 350 PC client card and WildPackets Airopeek[15] WLAN analyzer software. These monitoring stations were situated at Site 1 with an 11-dBi omnidirectional antenna on a 20-foot mast, at Site 4 (approximately 3 km down range

[15]Airopeek™ is a trademark of WildPackets, Inc., 1340 Treat Blvd, Suite 500, Walnut Creek CA, 94597.

and 1 km to the right of the flight path) with an 11-dBi omnidirectional antenna on a 5-foot mast, and at Site 5 with an 11-dBi omnidirectional antenna on a 50-foot mast.

The instrumented warheads were attached to MK66 Mod 2 rocket motors and launched from a 19-tube M261 lightweight launcher with a quadrant elevation equal to 434 mils (24.4 degrees). Figure 8 shows the launch site at Rocket Alley with the rocket in a pre-flight evaluation configuration, and figure 9 is a still photograph of one of the rockets taken during launch. The total flight distances of the rockets were approximately 7.5 km. Before each rocket was launched, a two-way data link was established between the rocket AP and the clients at Sites 1 and 3, but when the warheads were attached to the rocket motors and inserted into the launcher, the link with Site 3 failed. During flight, neither of the rockets achieved a link with Sites 2, 3, or 5. Video data obtained from a two-way link between Site 1 and the second rocket contained 3 seconds of post-launch data with 0.5 second of discernible video. Link and timing monitoring data were obtained by the Cisco Aironet 350 PCMCIA client adapter at Sites 1 and 5 for each rocket. At the time of this writing, the video data from the first rocket had not been post-processed.

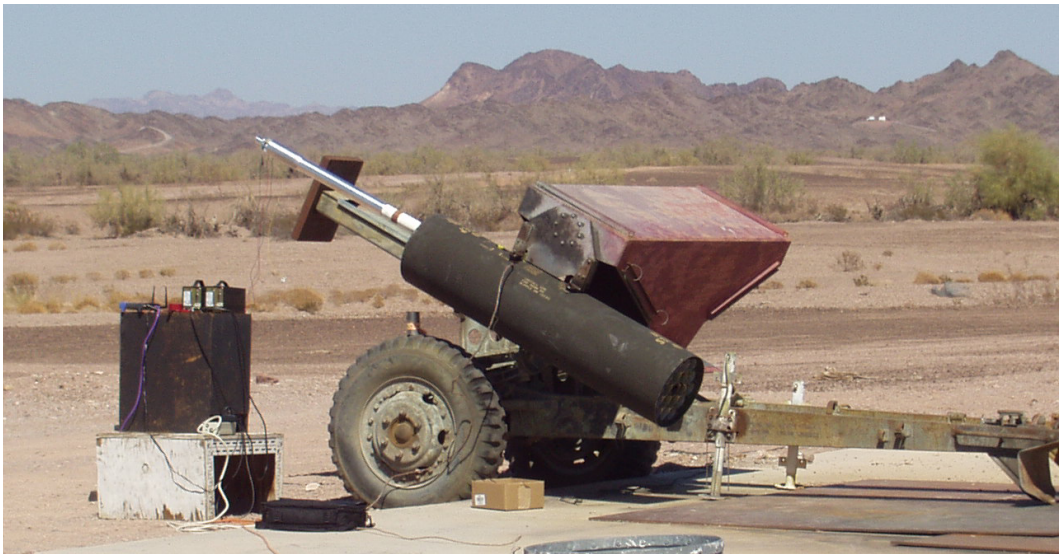

Figure 8. 2-RAD projectile in pre-flight evaluation configuration at Rocket Alley.

Figure 9. Launch of the 2-RAD projectile.

5. Conclusion

In an effort to assess the feasibility of two-way network-based communications on a munition, APL, ARL, and YPG produced a prototype 2.75-inch diameter rocket system that applied IEEE 802.11b standard COTS wireless hardware. The work presented in this report represents the first attempt to employ such industrial communication technology on a munition.

The results of this experiment reflect two major accomplishments. First, in light of the technical challenges of integrating the COTS hardware into the munition and establishing a two-way communication link, the video data obtained from the rocket firings mark the first successful wireless two-way communication on a munition. Second, the experiment results help to identify the need to apply technology that can provide a robust two-way link for an extended period between munitions and transceivers. When this ability is realized, it will open the door to simultaneous multiple munition communication experimentation that can approach those needs of future combat systems.

6. References

1. LAN/MAN Standards Committee of the IEEE Computer Society. Part 11: Wireless LAN Medium Access Control (MAC) and Physical Layer (PHY) Specifications: Higher Speed Physical Layer Extension in the 2.4 GHz Band; IOC/IEC 8802.11: 1999(E), Piscataway, NJ, 16 September 1999.

2. Davis, B. S.; Condon, J. A.; Brown, T. G. *Flight Demonstration Results of an Inertial Measurement Unit and Global Positioning System Translator Telemetry System*; ARL-TR-2630; U.S. Army Research Laboratory: Aberdeen Proving Ground, MD, November 2001.

3. Childers, M.A. *Evaluation of the IMPAC66 Shock Test Machine, Serial Number 118*; ARL-TR-2840; U.S. Army Research Laboratory: Aberdeen Proving Ground, MD, October 2002.

4. Brandon, F. 2-RAD launch event (PRODAS V3.1.25, Arrow Tech Assoc. and PRODAS Partners, copyright 1999-2003), U.S. Army Research Laboratory: Aberdeen Proving Ground, MD, unpublished data.

INTENTIONALLY LEFT BLANK

Appendix A. Electrical Wiring Diagram

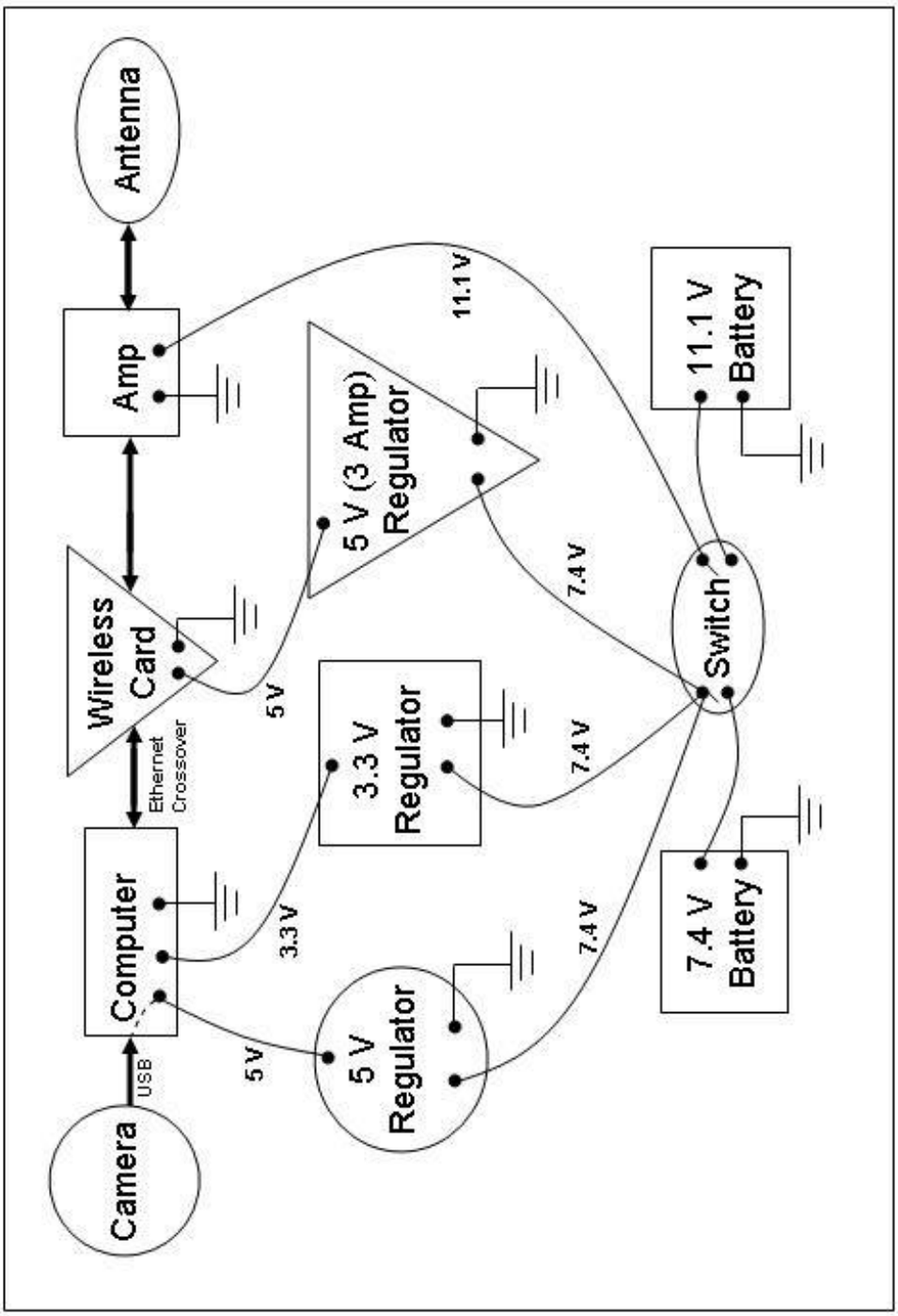

INTENTIONALLY LEFT BLANK

Appendix B. Mechanical Drawing

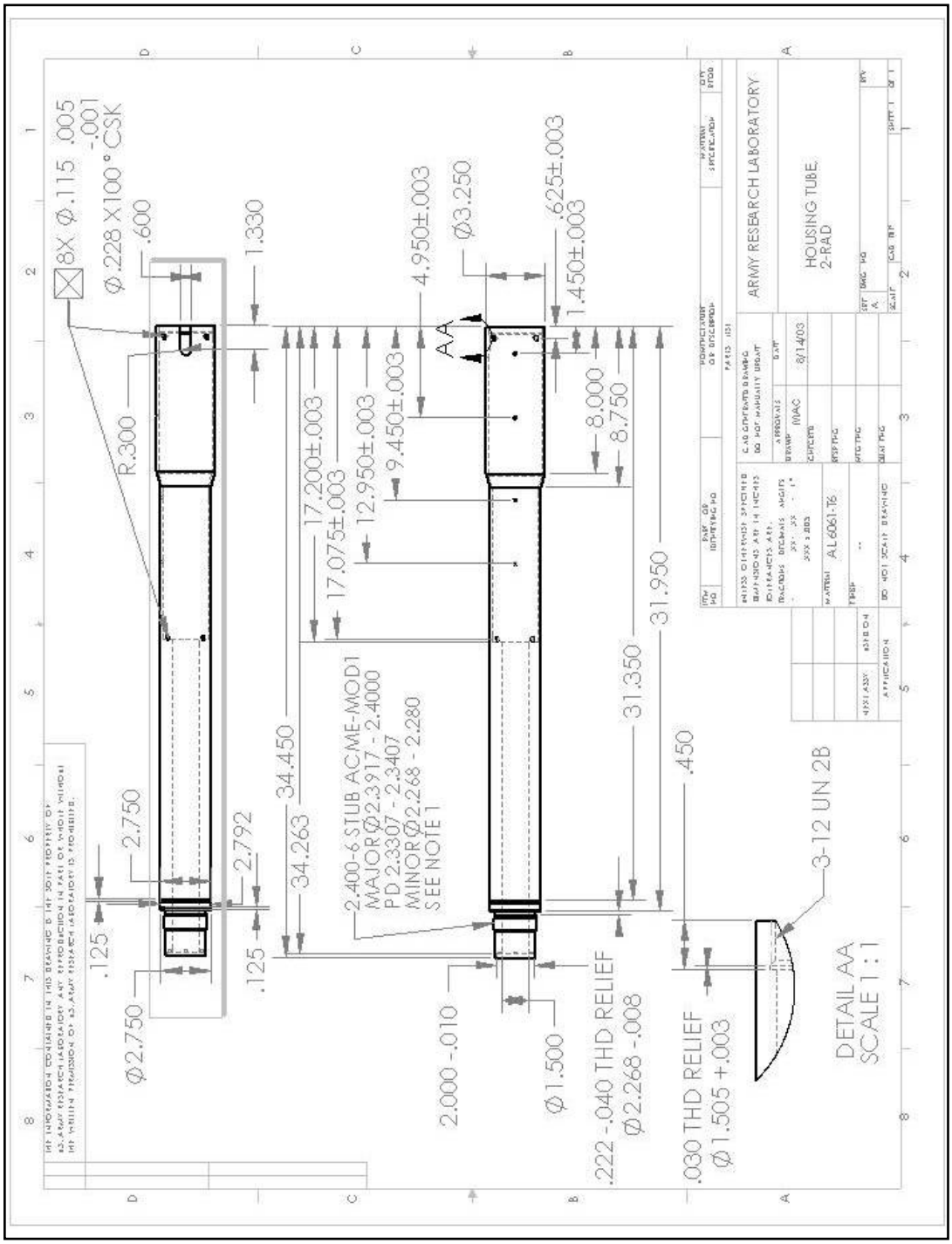

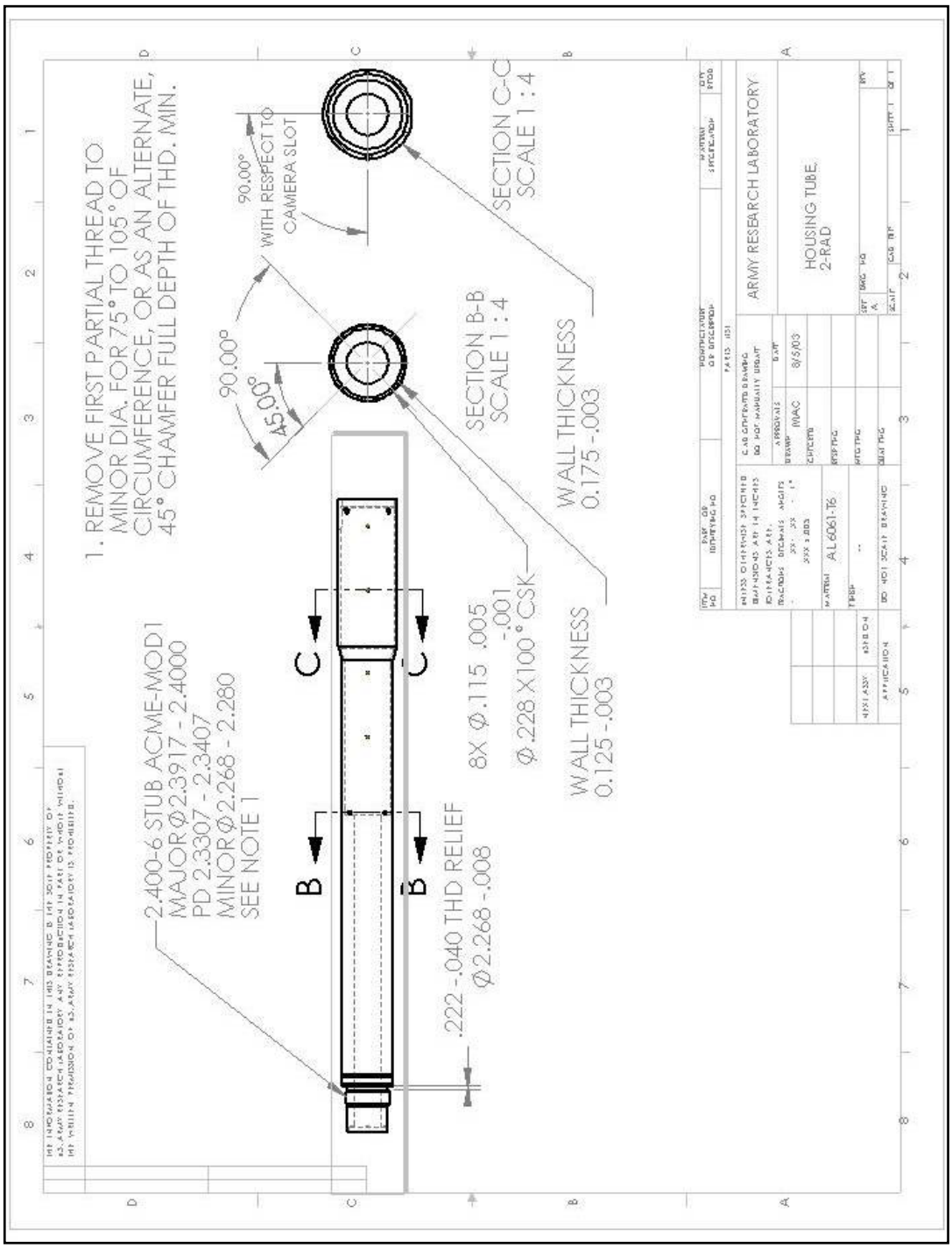
1. REMOVE FIRST PARTIAL THREAD TO MINOR DIA. FOR 75° TO 105° OF CIRCUMFERENCE, OR AS AN ALTERNATE, 45° CHAMFER FULL DEPTH OF THD. MIN.
2.400-6 STUB ACME-MOD1
MAJOR Ø2.3917 - 2.4000
PD 2.3307 - 2.3407
MINOR Ø2.268 - 2.280
SEE NOTE 1
.222 -.040 THD RELIEF
Ø2.268 -.008
8X Ø.115 .005 -.001
Ø.228 X100° CSK
WALL THICKNESS
0.125 -.003
WALL THICKNESS
0.175 -.003
90.00°
45.00°
90.00°
WITH RESPECT TO CAMERA SLOT
SECTION B-B
SCALE 1 : 4
SECTION C-C
SCALE 1 : 4
B
B
C
C
ARMY RESEARCH LABORATORY
HOUSING TUBE, 2-RAD
AL6061-T6
8/5/03
IWAC

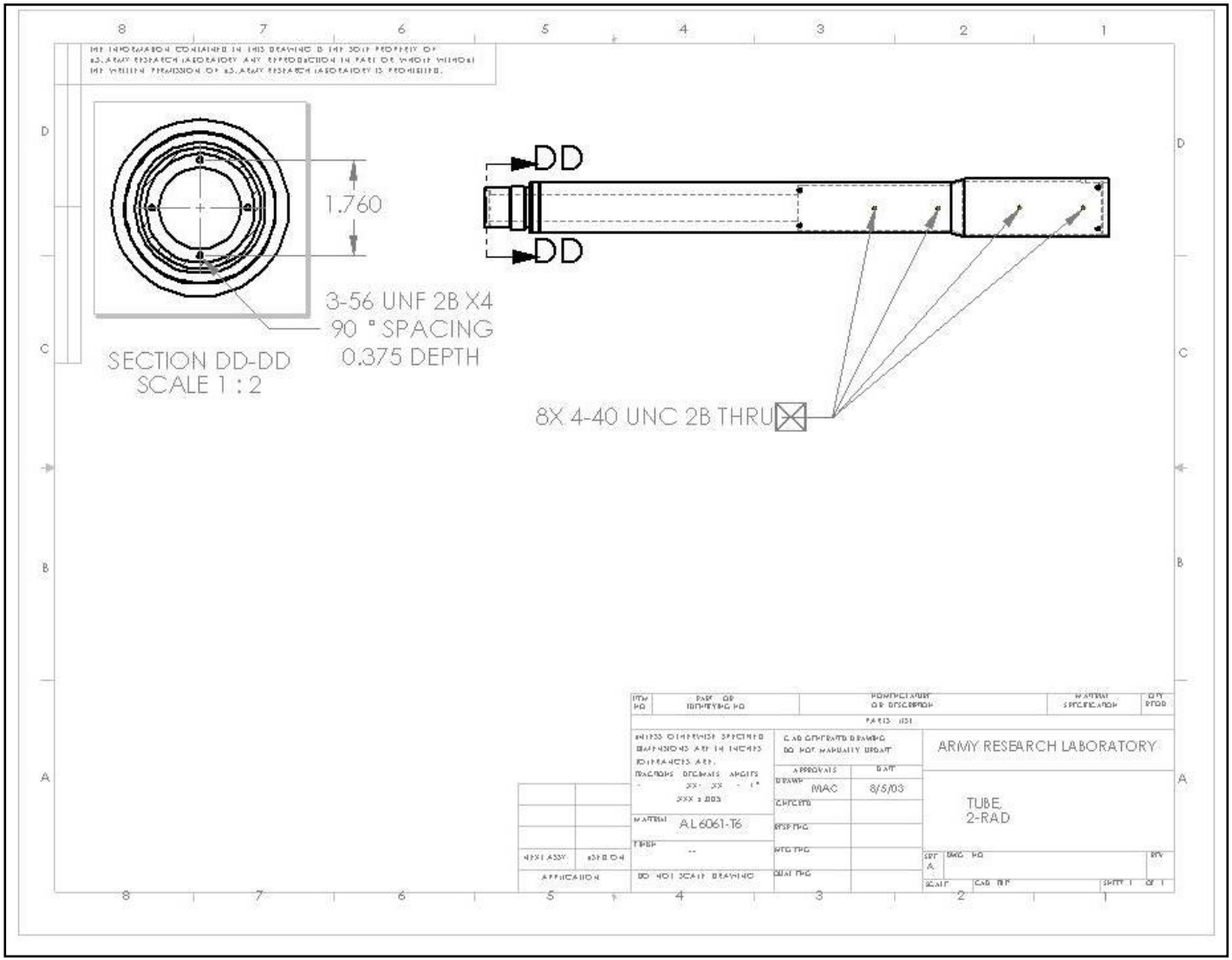
THE INFORMATION CONTAINED IN THIS DRAWING IS THE SOLE PROPERTY OF
U.S. ARMY RESEARCH LABORATORY. ANY REPRODUCTION IN PART OR WHOLE WITHOUT
THE WRITTEN PERMISSION OF U.S. ARMY RESEARCH LABORATORY IS PROHIBITED.
1.760
3-56 UNF 2B X4
90 ° SPACING
0.375 DEPTH
SECTION DD-DD
SCALE 1 : 2
DD
DD
8X 4-40 UNC 2B THRU
ARMY RESEARCH LABORATORY
TUBE,
2-RAD
AL6061-T6
MAC
8/5/03
DO NOT SCALE DRAWING

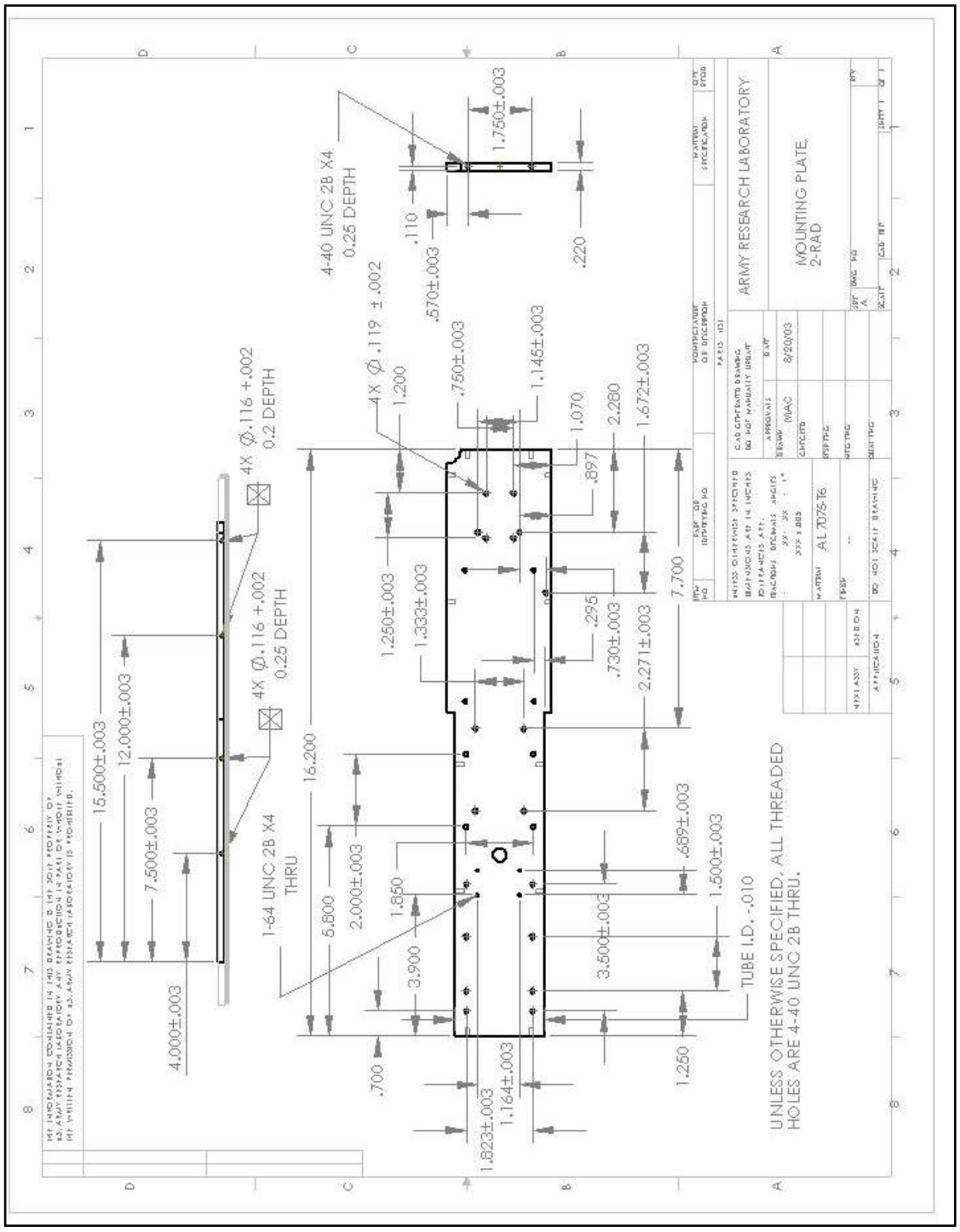
15.500±.003
12.000±.003
7.500±.003
4.000±.003
4X Ø.116 +.002
0.2 DEPTH
4X Ø.116 +.002
0.25 DEPTH
1-64 UNC 2B X4
THRU
16.200
5.800
2.000±.003
1.850
3.900
.700
1.823±.003
1.164±.003
4-40 UNC 2B X4
0.25 DEPTH
4X Ø.119 ±.002
1.200
1.250±.003
1.333±.003
3.500±.003
1.250
.689±.003
1.500±.003
TUBE I.D. -.010
.750±.003
1.145±.003
1.070
.897
2.280
1.672±.003
.295
.730±.003
2.271±.003
7.700
.570±.003
.110
1.750±.003
.220
UNLESS OTHERWISE SPECIFIED, ALL THREADED
HOLES ARE 4-40 UNC 2B THRU.
ARMY RESEARCH LABORATORY
MOUNTING PLATE,
2-RAD
AL 7075-T6
8/20/03

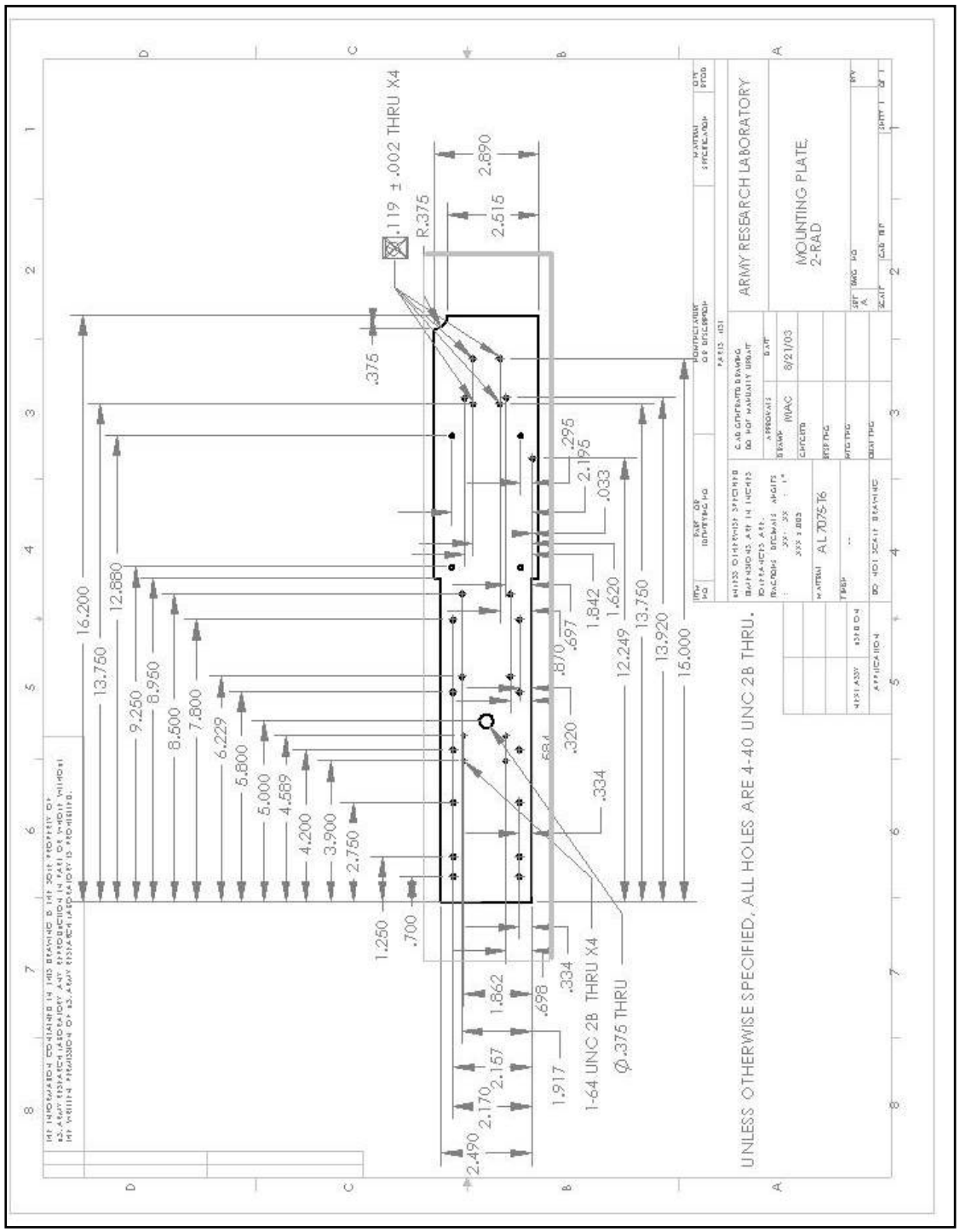
.119 ± .002 THRU X4
R.375
2.890
2.515
.375
16.200
13.760
12.880
9.250
8.950
8.500
7.800
6.229
5.800
5.000
4.589
4.200
3.900
2.750
1.250
.700
.334
1-64 UNC 2B THRU X4
Ø.375 THRU
2.490
2.170
2.157
1.862
.698
1.917
.320
.870
.697
1.842
1.620
12.249
13.750
13.920
15.000
.334
.033
2.195
.295
UNLESS OTHERWISE SPECIFIED, ALL HOLES ARE 4-40 UNC 2B THRU.
ARMY RESEARCH LABORATORY
MOUNTING PLATE,
2-RAD
AL 7075-T6
8/21/03

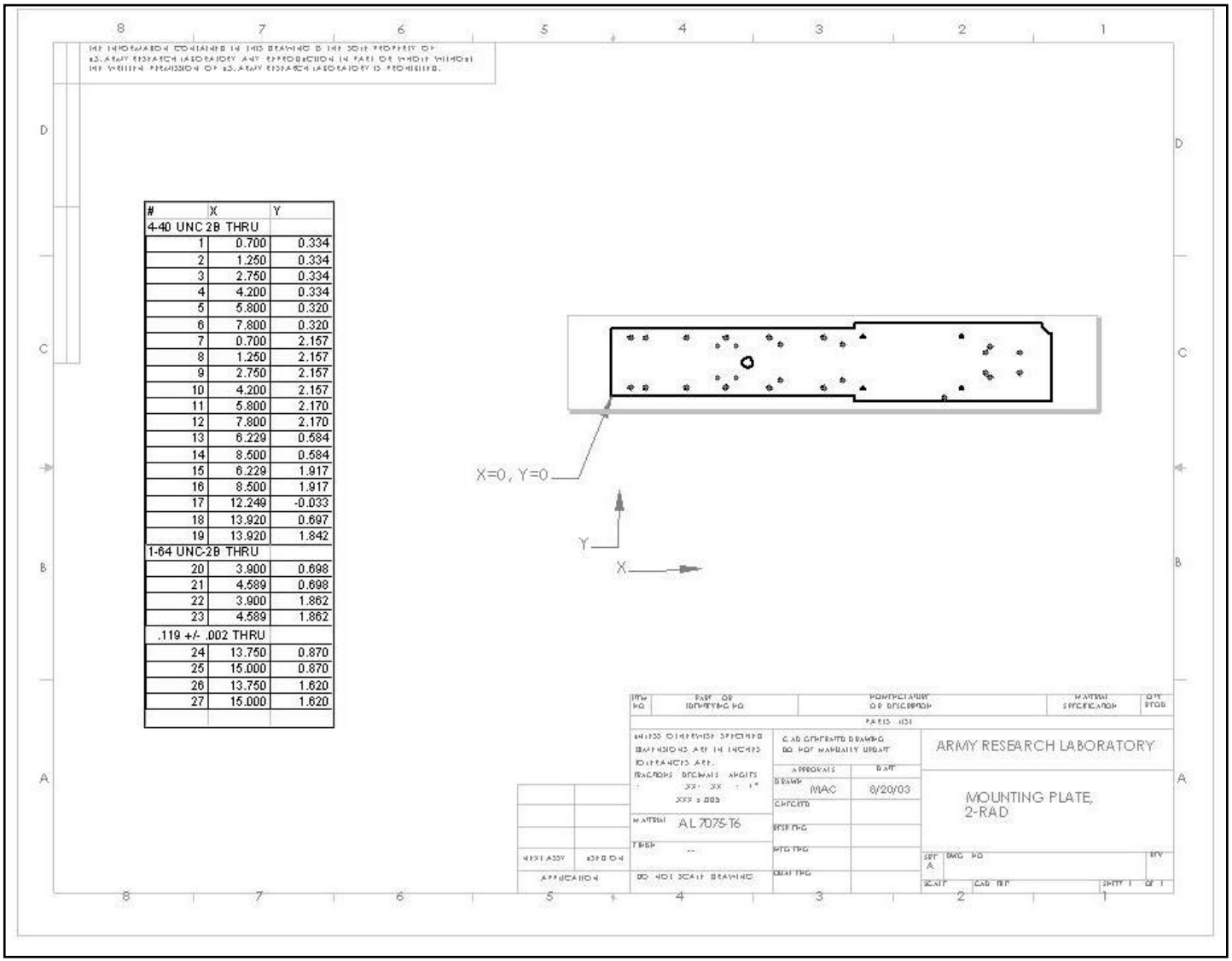

#	X	Y
4-40 UNC 2B THRU		
1	0.700	0.334
2	1.250	0.334
3	2.750	0.334
4	4.200	0.334
5	5.800	0.320
6	7.800	0.320
7	0.700	2.157
8	1.250	2.157
9	2.750	2.157
10	4.200	2.157
11	5.800	2.170
12	7.800	2.170
13	6.229	0.584
14	8.500	0.584
15	6.229	1.917
16	8.500	1.917
17	12.249	-0.033
18	13.920	0.697
19	13.920	1.842
1-64 UNC-2B THRU		
20	3.900	0.698
21	4.589	0.698
22	3.900	1.862
23	4.589	1.862
.119 +/- .002 THRU		
24	13.750	0.870
25	15.000	0.870
26	13.750	1.620
27	15.000	1.620

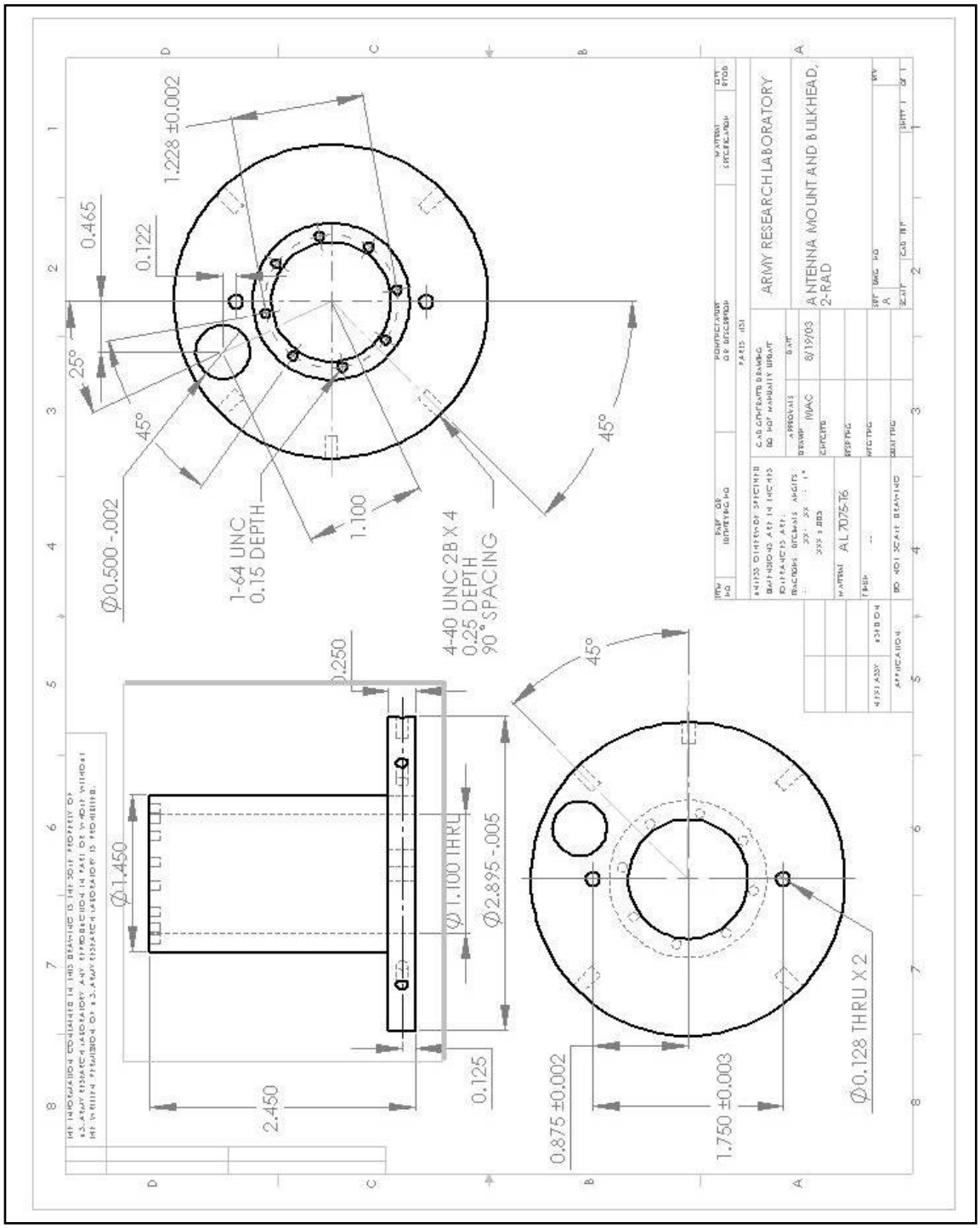
ARMY RESEARCH LABORATORY
ANTENNA MOUNT AND BULKHEAD, 2-RAD
AL 7075-T6
8/19/03
1.228 ±0.002
0.465
0.122
25°
45°
Ø0.500 -.002
1-64 UNC
0.15 DEPTH
1.100
4-40 UNC 2B X 4
0.25 DEPTH
90° SPACING
45°
45°
0.250
Ø1.450
Ø1.100 THRU
Ø2.895 -.005
2.450
0.125
0.875 ±0.002
1.750 ±0.003
Ø0.128 THRU X 2

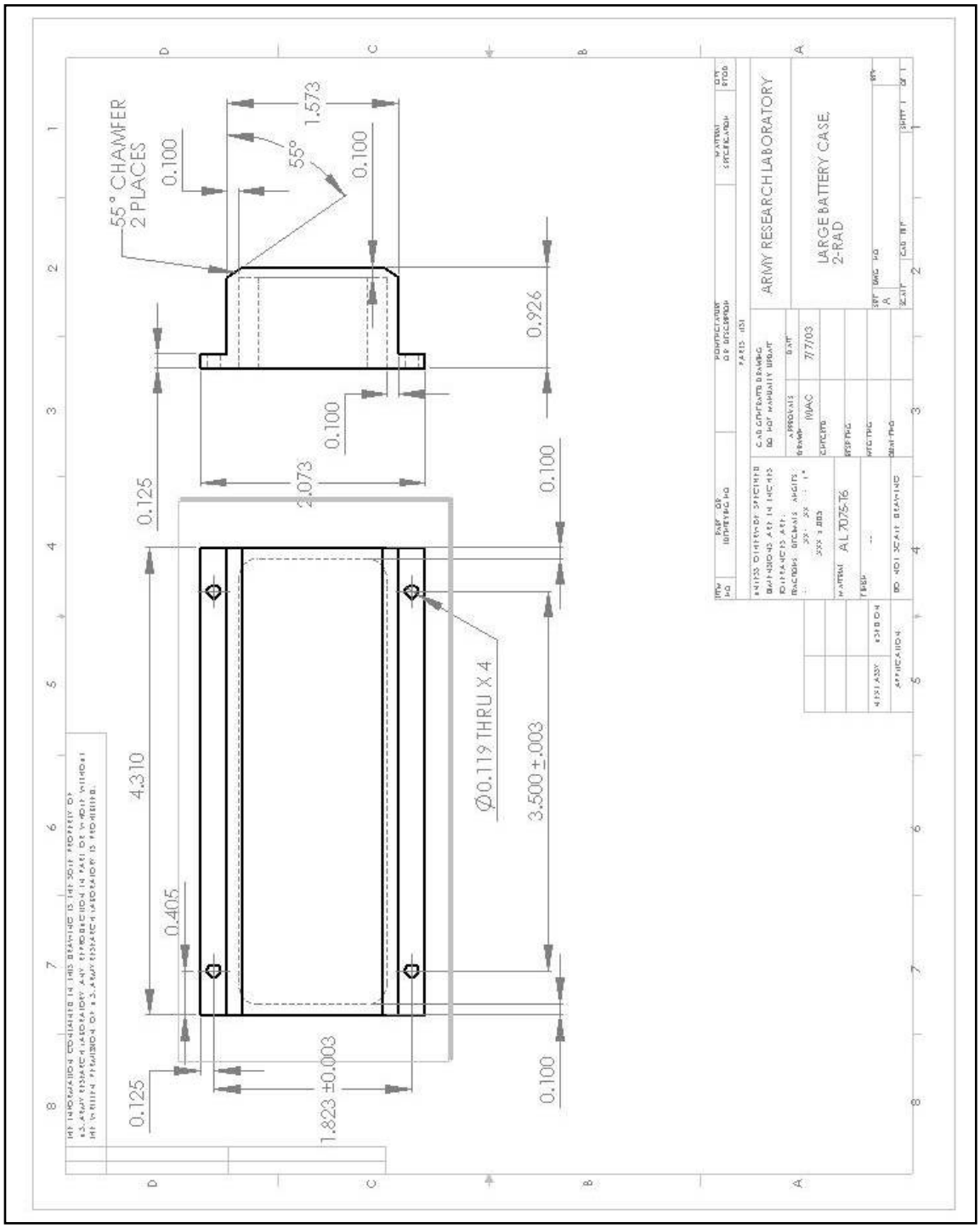
55° CHAMFER
2 PLACES
0.100
55°
1.573
0.100
0.926
0.100
2.073
0.125
0.100
4.310
0.405
Ø0.119 THRU X 4
3.500 ±.003
0.125
1.823 ±0.003
0.100
ARMY RESEARCH LABORATORY
LARGE BATTERY CASE
2-RAD
AL 7075-T6
7/7/03

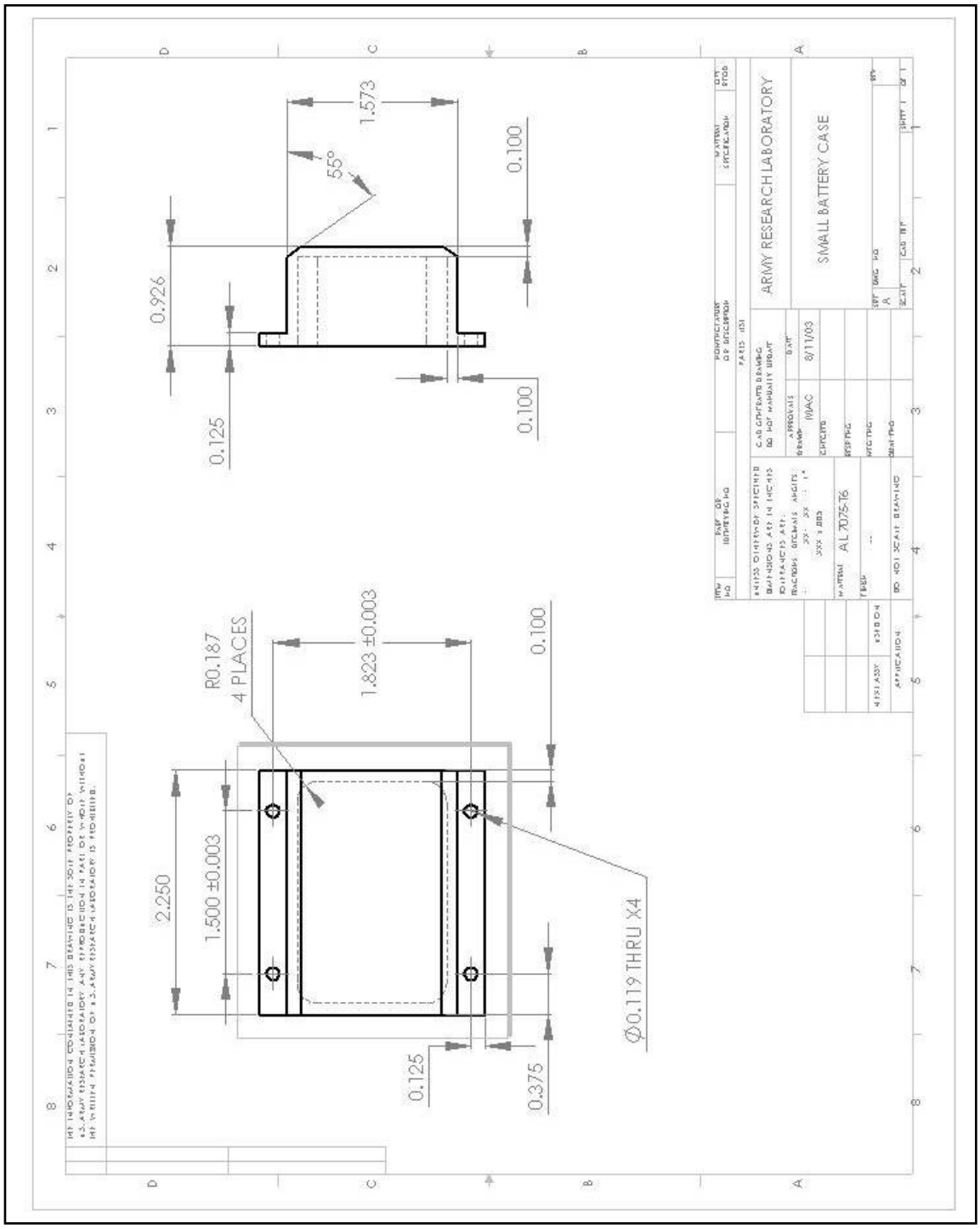
0.926
0.125
55°
1.573
0.100
0.100
R0.187
4 PLACES
1.823 ±0.003
0.100
2.250
1.500 ±0.003
Ø0.119 THRU X4
0.125
0.375
ARMY RESEARCH LABORATORY
SMALL BATTERY CASE
AL 7075-T6
8/11/03

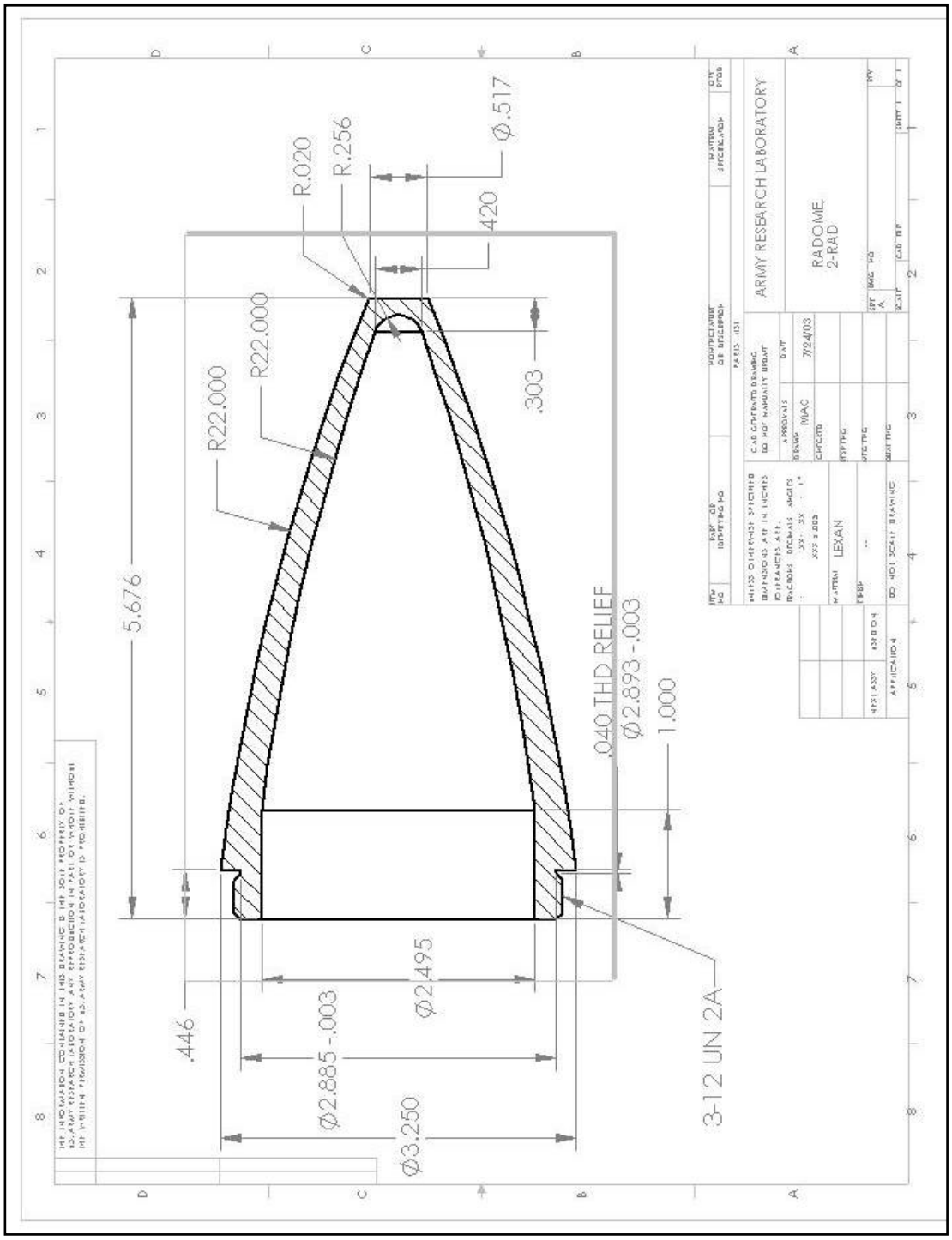
R.020
R.256
Ø.517
.420
R22.000
R22.000
.303
5.676
.040 THD RELIEF
Ø2.893 -.003
1.000
.446
Ø2.885 -.003
Ø2.495
Ø3.250
3-12 UN 2A
ARMY RESEARCH LABORATORY
RADOME,
2-RAD
LEXAN

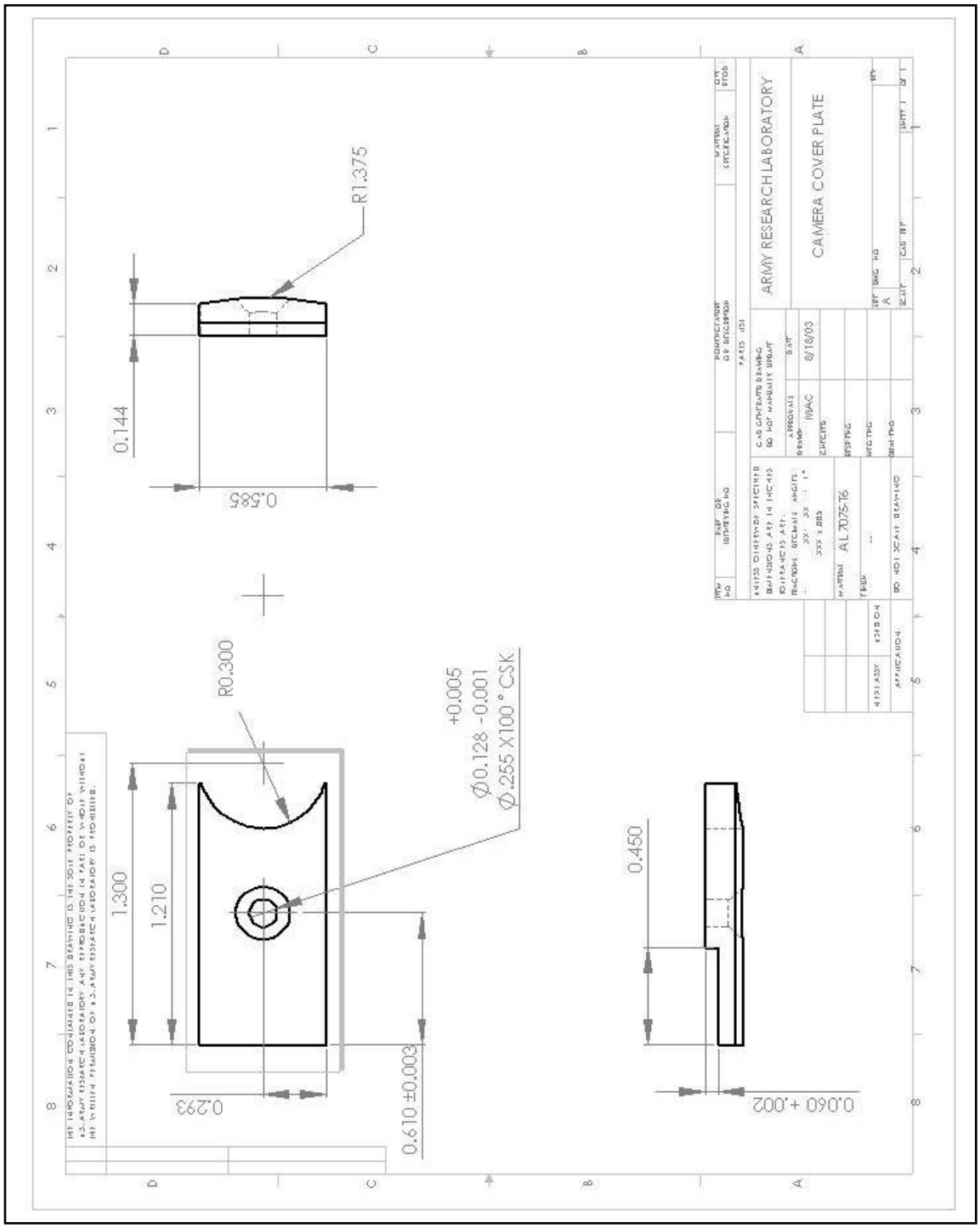
R1.375
0.144
0.585
R0.300
+0.005
Ø0.128 -0.001
Ø.255 X100 ° CSK
1.300
1.210
0.293
0.610 ±0.003
0.450
0.060 +.002
ARMY RESEARCH LABORATORY
CAMERA COVER PLATE
AL 7075-T6
8/18/03

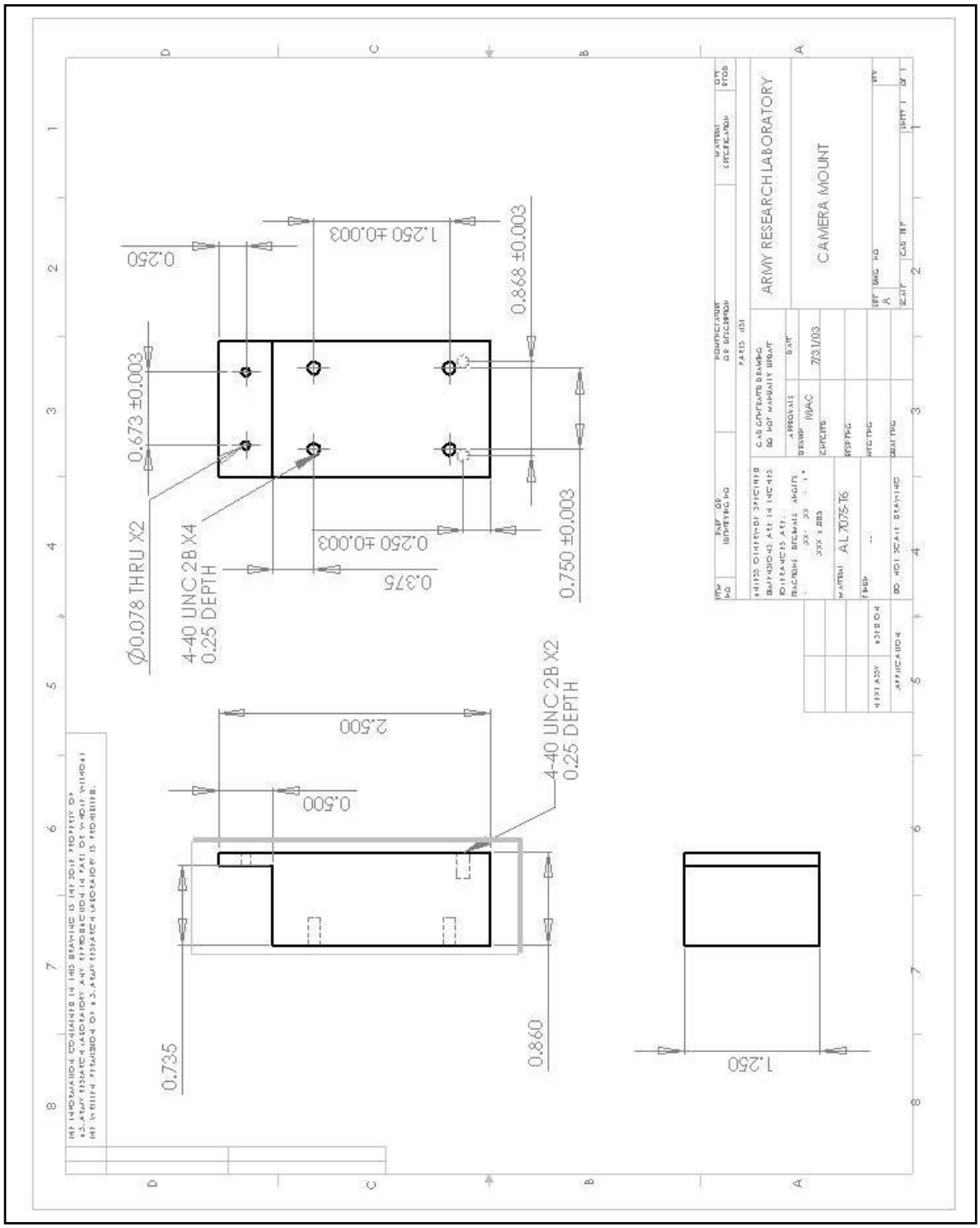
ARMY RESEARCH LABORATORY
CAMERA MOUNT
AL 7075-T6
7/31/03
0.868 ±0.003
1.250 ±0.003
0.673 ±0.003
0.250
Ø0.078 THRU X2
4-40 UNC 2B X4
0.25 DEPTH
0.375
0.250 ±0.003
0.750 ±0.003
2.500
0.500
4-40 UNC 2B X2
0.25 DEPTH
0.735
0.860
1.250

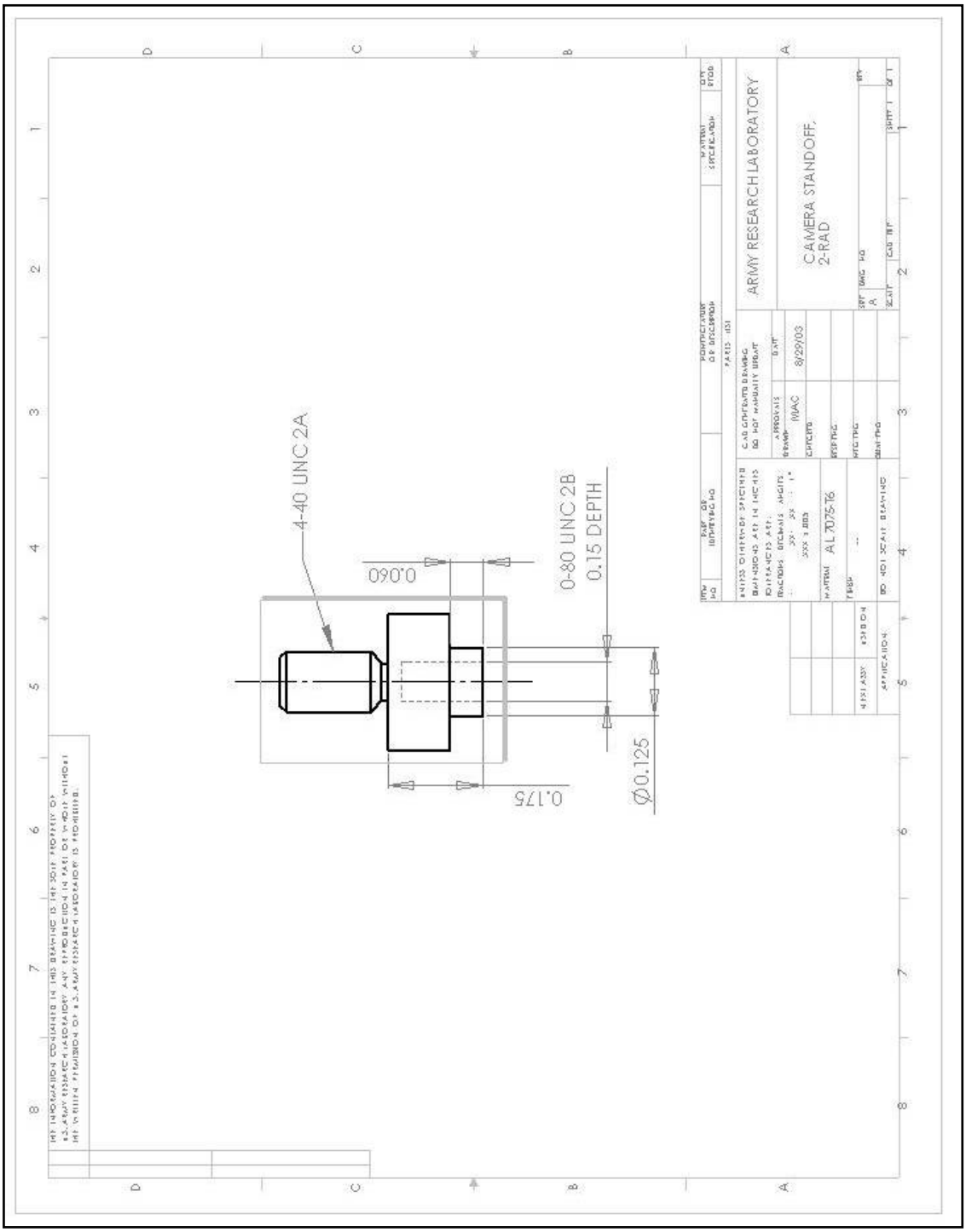
4-40 UNC 2A
0.060
0-80 UNC 2B
0.15 DEPTH
0.175
Ø0.125
ARMY RESEARCH LABORATORY
CAMERA STANDOFF,
2-RAD
8/29/03
AL 7075-T6

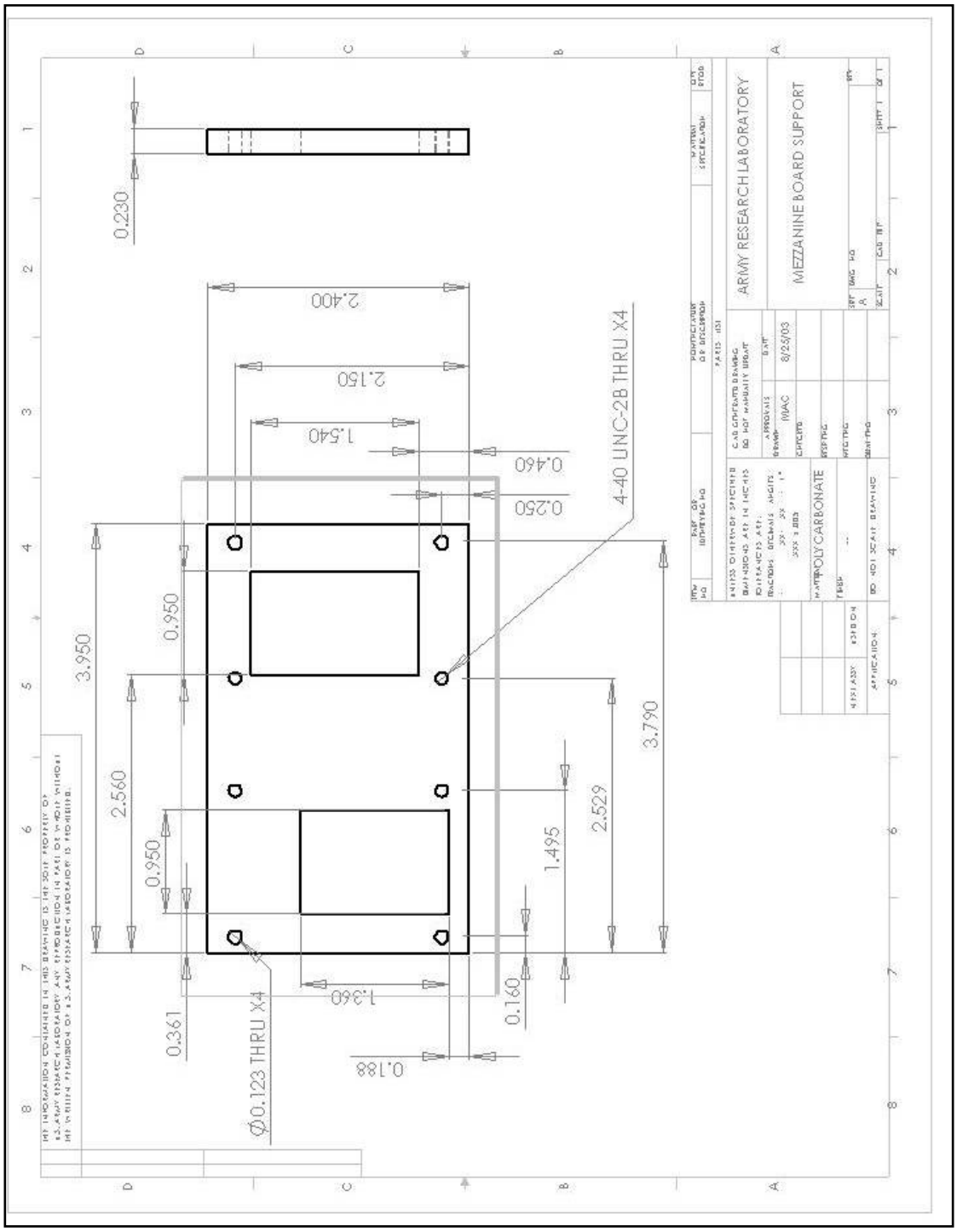
0.230
2.400
2.150
1.540
0.460
0.250
4-40 UNC-2B THRU X4
3.950
0.950
2.560
0.950
3.790
2.529
1.495
1.360
0.160
0.361
0.188
Ø0.123 THRU X4
ARMY RESEARCH LABORATORY
MEZZANINE BOARD SUPPORT
POLYCARBONATE
8/25/03

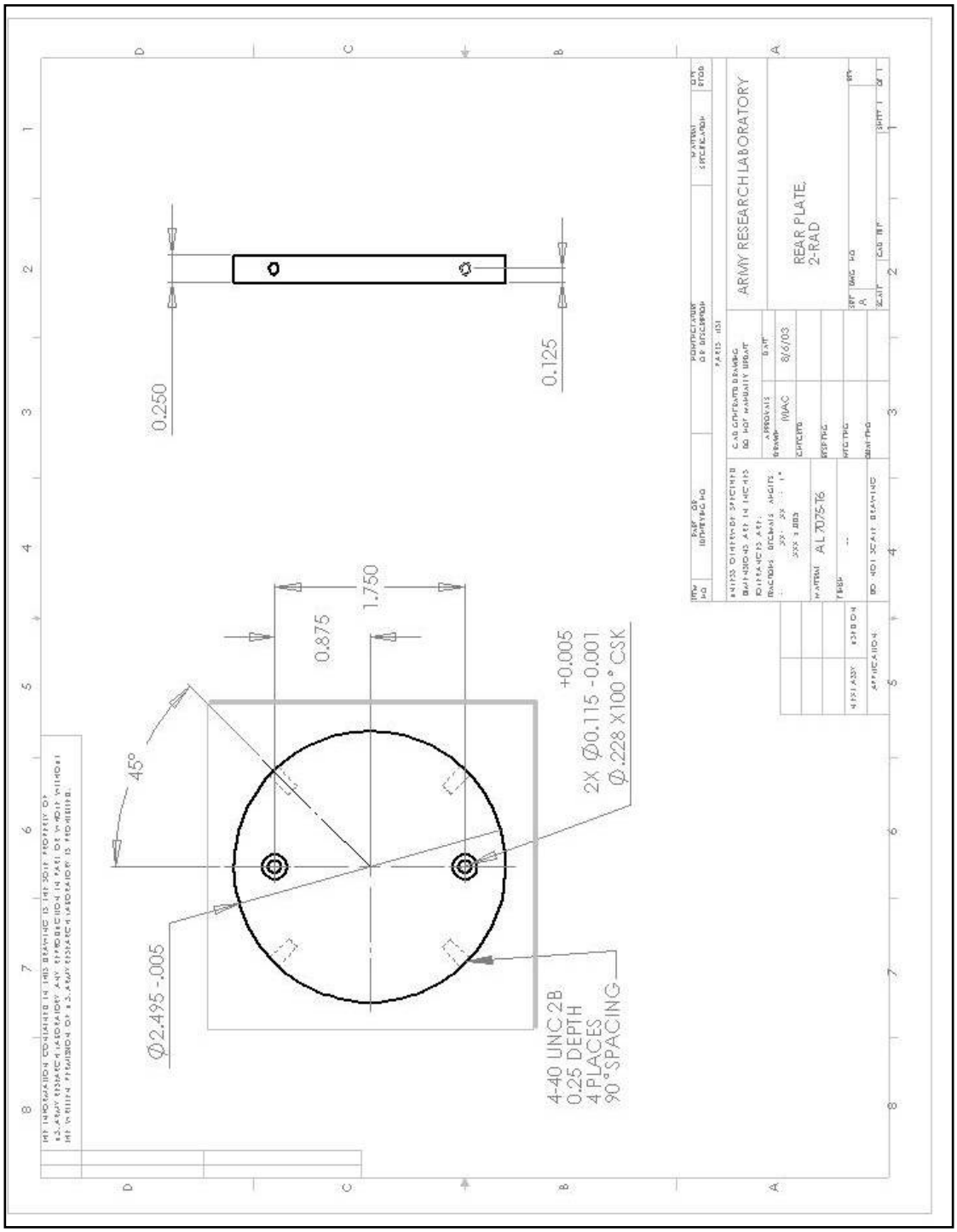
0.250
0.125
0.875
1.750
45°
Ø2.495 -.005
+0.005
2X Ø0.115 -0.001
Ø.228 X100 ° CSK
4-40 UNC 2B
0.25 DEPTH
4 PLACES
90 °SPACING
ARMY RESEARCH LABORATORY
REAR PLATE,
2-RAD
AL 7075-T6

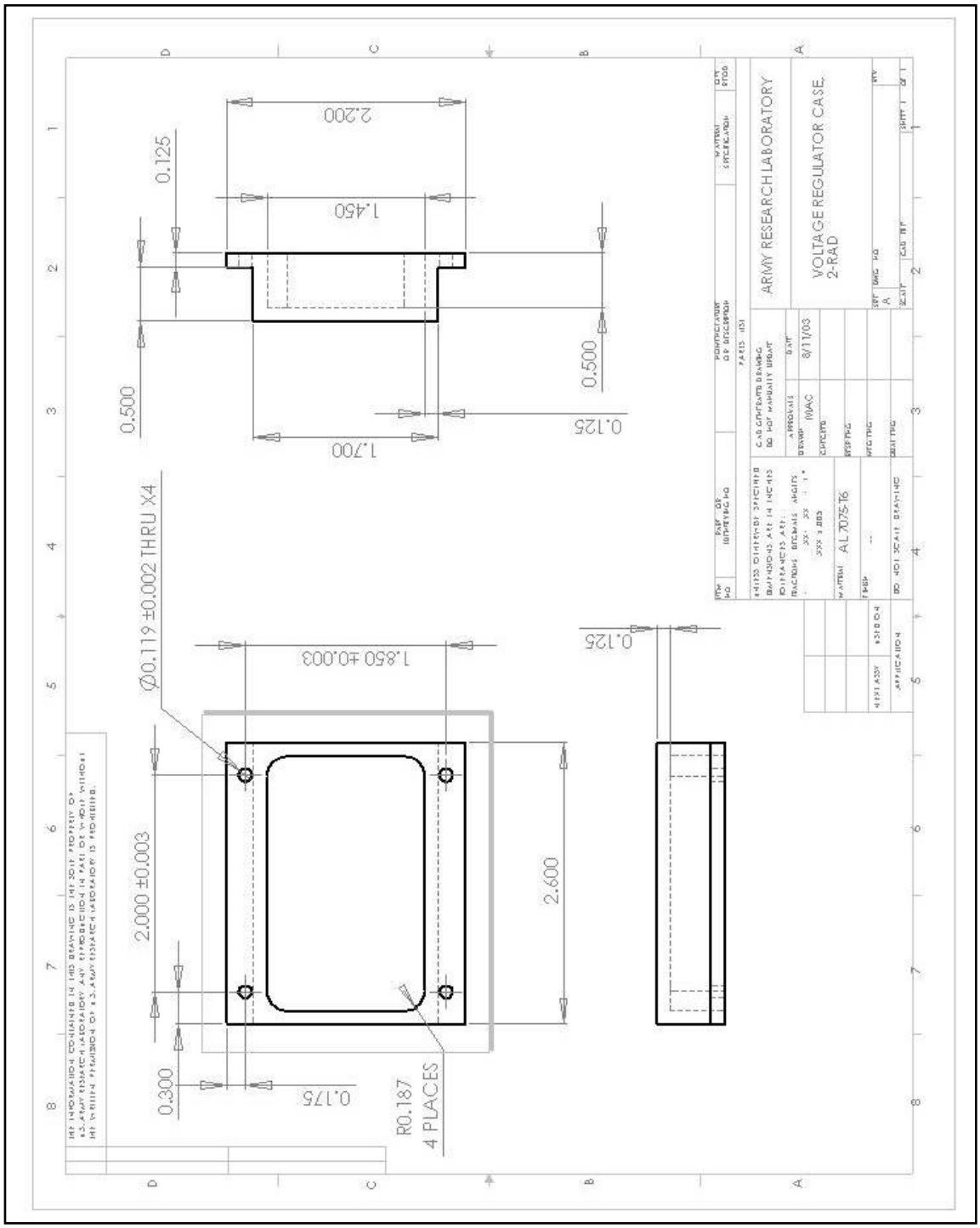
ARMY RESEARCH LABORATORY
VOLTAGE REGULATOR CASE, 2-RAD
AL 7075-T6
8/11/03
2.200
1.450
0.125
0.500
1.700
Ø0.119 ±0.002 THRU X4
1.850 ±0.003
2.000 ±0.003
2.600
0.300
0.175
R0.187
4 PLACES

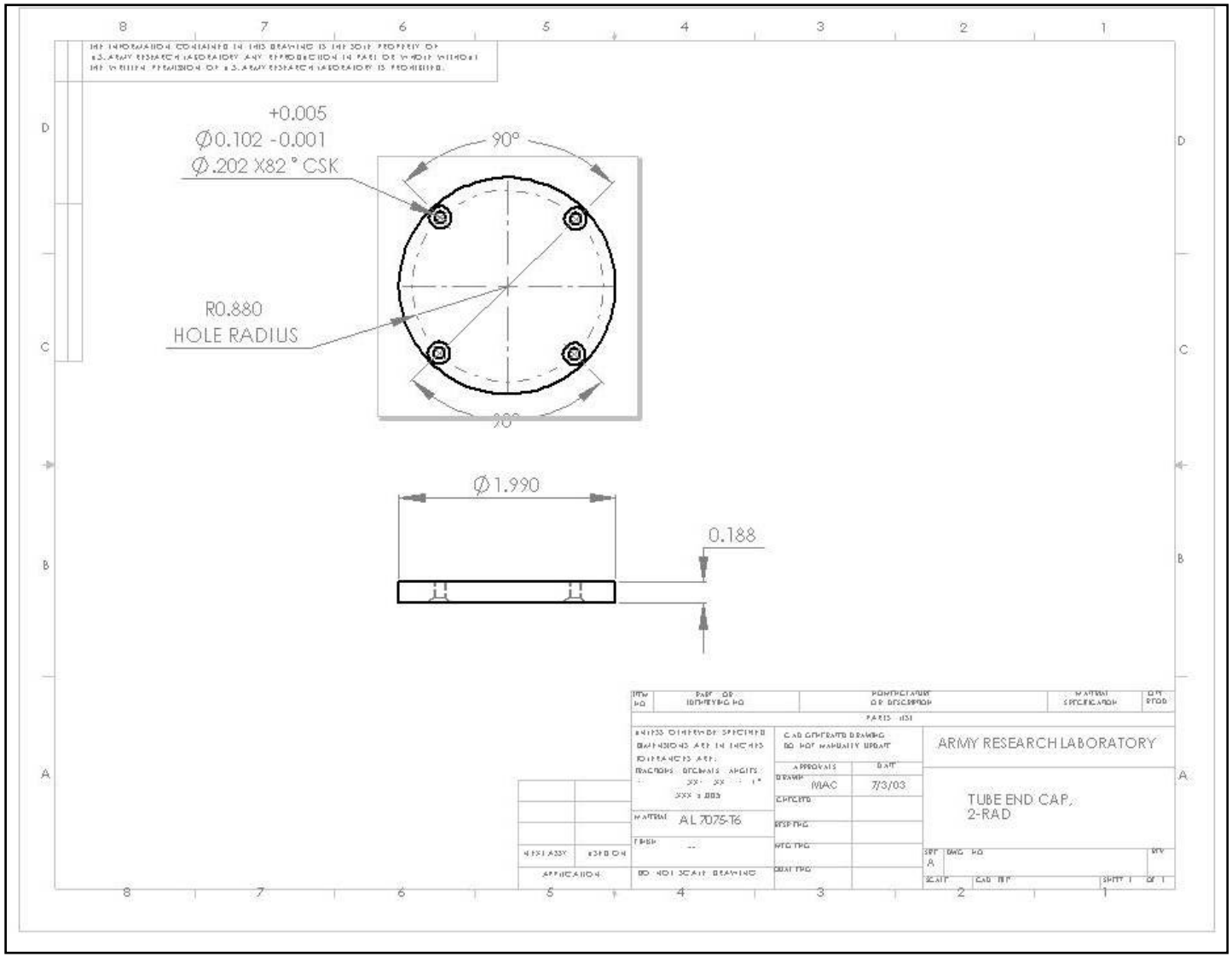
+0.005
Ø0.102 -0.001
Ø.202 X82 ° CSK
90°
R0.880
HOLE RADIUS
90°
Ø1.990
0.188
ARMY RESEARCH LABORATORY
TUBE END CAP,
2-RAD
MAC
7/3/03
AL 7075-T6

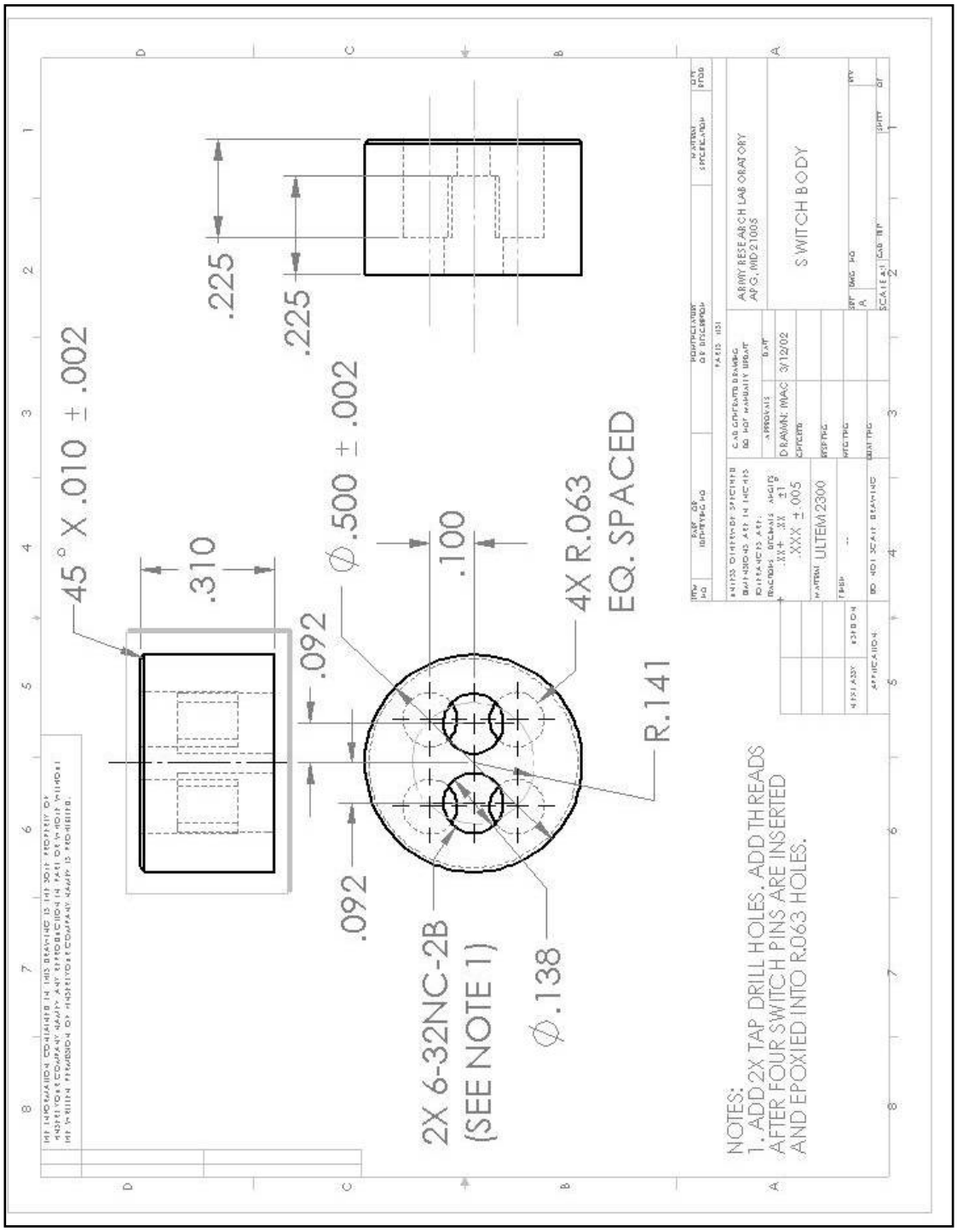
45° X .010 ± .002
.310
.092
Ø.500 ± .002
.100
4X R.063
EQ. SPACED
R.141
.225
.225
.092
2X 6-32NC-2B
(SEE NOTE 1)
Ø.138
NOTES:
1. ADD 2X TAP DRILL HOLES. ADD TH READS
AFTER FOUR SWITCH PINS ARE INSERTED
AND EPOXIED INTO R.063 HOLES.
ARMY RESEARCH LAB ORATORY
APG, MD 21005
SWITCH BODY
MATERIAL ULTEM 2300
DRAWN: MAC 3/12/02

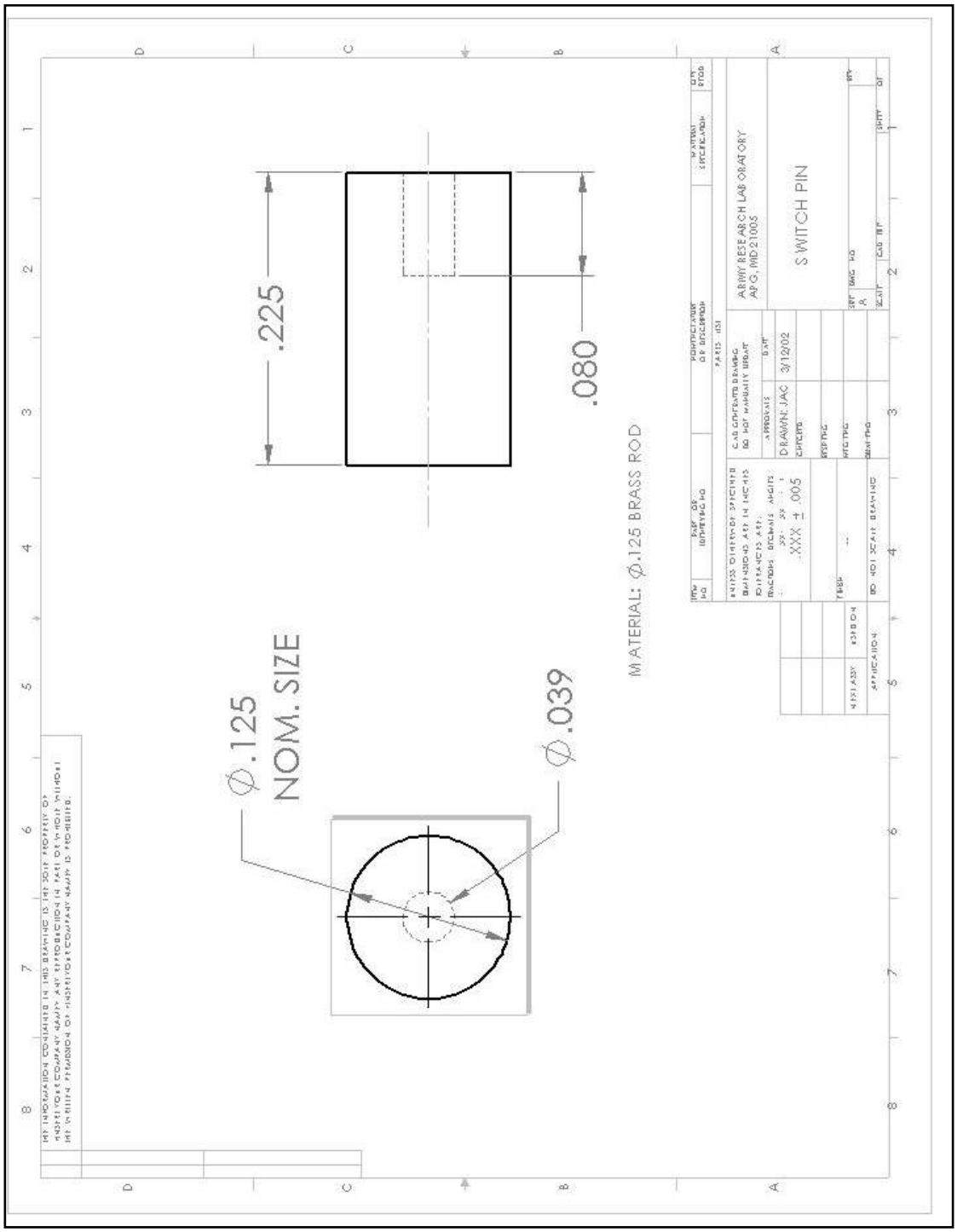
.225
.080
MATERIAL: Ø.125 BRASS ROD
Ø.125
NOM. SIZE
Ø.039
ARMY RESEARCH LABORATORY
APG, MD 21005
SWITCH PIN
DRAWN: JAC 3/12/02
.XXX ± .005

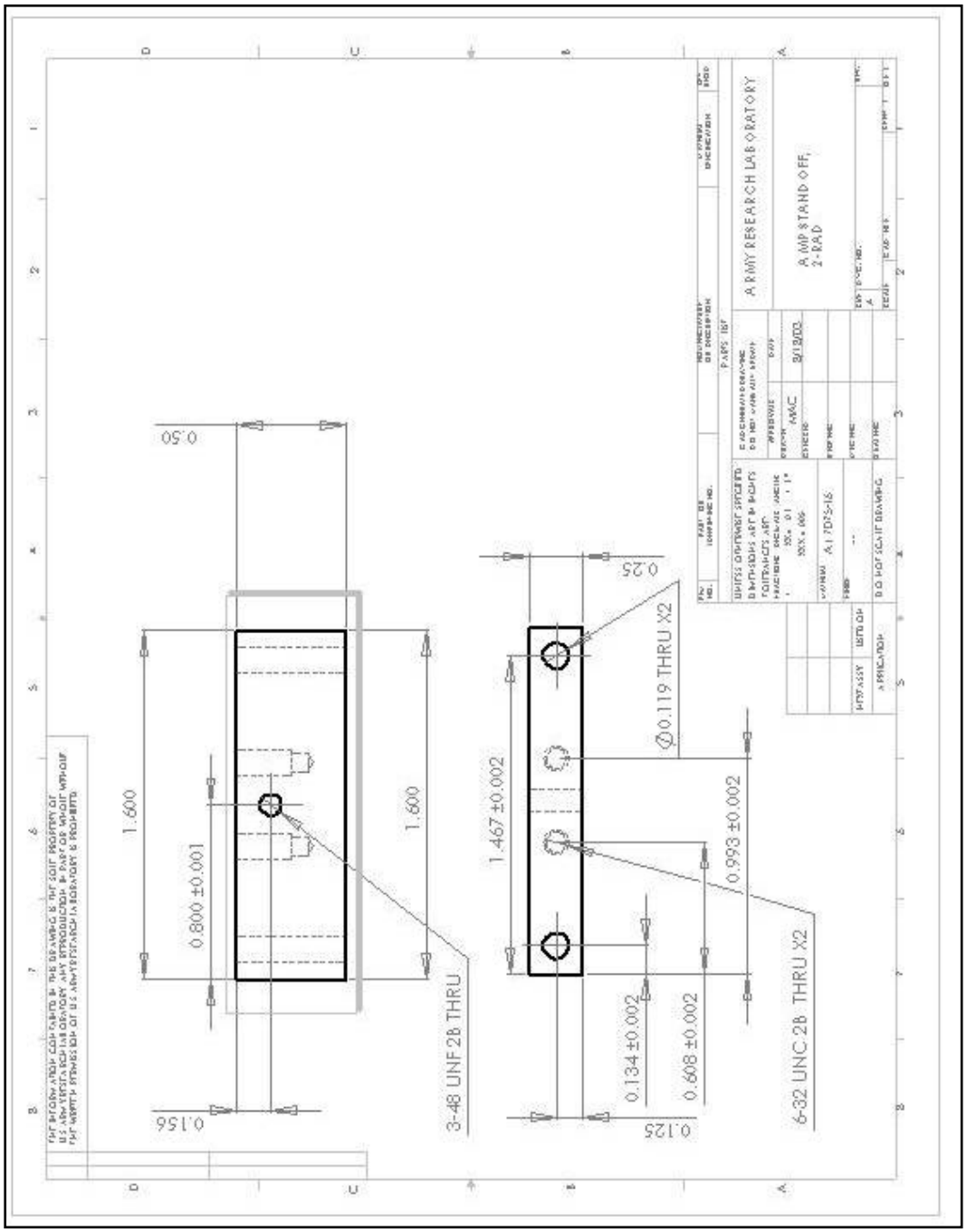

ARMY RESEARCH LABORATORY
AMP STAND OFF, 2-RAD
1.600
0.800 ±0.001
1.600
0.50
0.156
3-48 UNF 2B THRU
1.467 ±0.002
0.25
Ø0.119 THRU X2
0.993 ±0.002
0.134 ±0.002
0.608 ±0.002
0.125
6-32 UNC 2B THRU X2

Appendix C. Projectile Trajectory Prediction Graph

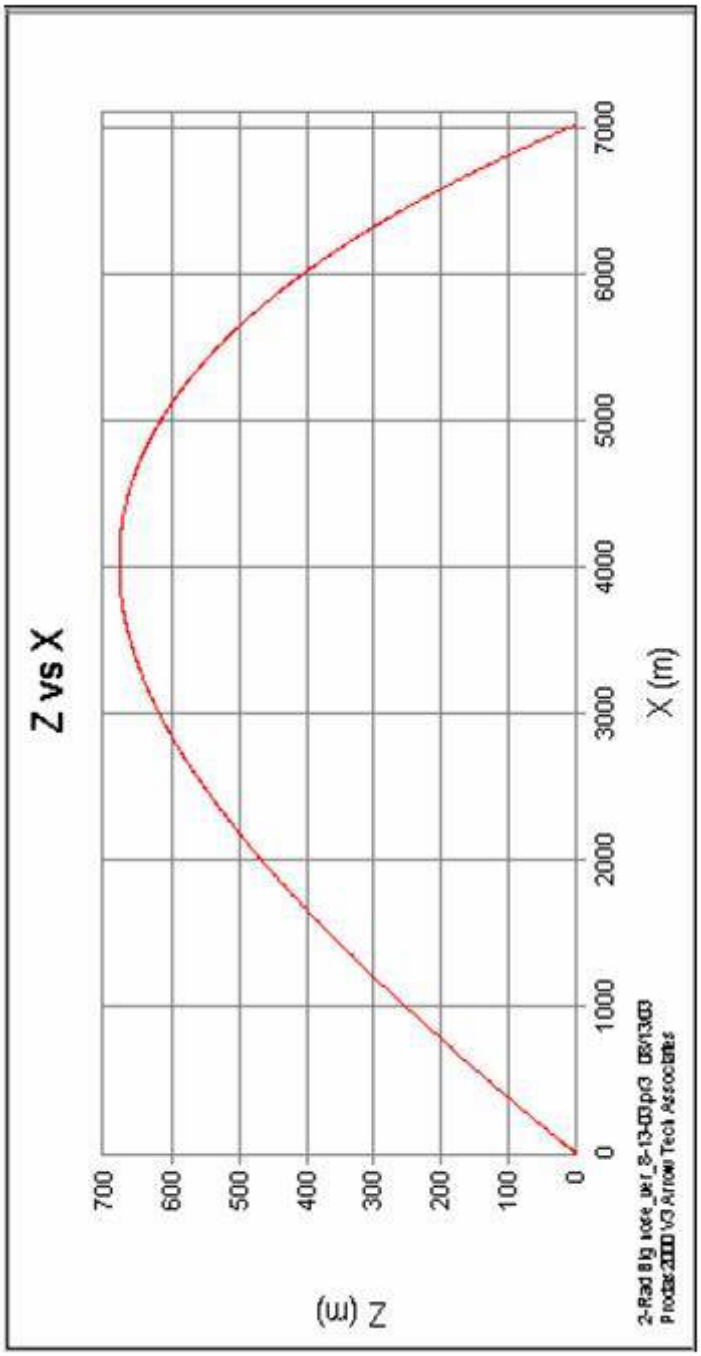

INTENTIONALLY LEFT BLANK.

NO. OF
COPIES ORGANIZATION

* ADMINISTRATOR
DEFENSE TECHNICAL INFO CTR
ATTN DTIC OCA
8725 JOHN J KINGMAN RD STE 0944
FT BELVOIR VA 22060-6218
*pdf file only

1 DIRECTOR
US ARMY RSCH LABORATORY
ATTN AMSRD ARL CI IS R REC MGMT
2800 POWDER MILL RD
ADELPHI MD 20783-1197

1 DIRECTOR
US ARMY RSCH LABORATORY
ATTN AMSRD ARL CI OK TECH LIB
2800 POWDER MILL RD
ADELPHI MD 20783-1197

1 DIRECTOR
US ARMY RSCH LABORATORY
ATTN AMSRD ARL D D SMITH
2800 POWDER MILL RD
ADELPHI MD 20783-1197

4 DIRECTOR
US ARMY RSCH LABORATORY
ATTN AMSRD ARL SE RL M DUBEY
B PIEKARSKI
AMSRD ARL SE RM H WALLACE
AMSRD ARL SE SS LADAS
2800 POWDER MILL RD
ADELPHI MD 20783-1197

1 CDR US ARMY TACOM ARDEC
ATTN AMSTA AR FSP M HOLLIS
PICATINNY ARSENAL NJ 07806-5000

1 CDR NAVAL SURF WARFARE CTR
ATTN G33 D HAGEN
17320 DAHLGREN ROAD
DAHLGREN VA 22448-5100

3 PROGRAM MGR ITTS
STRICOM
ATTN AMFTI EL D SCHNEIDER
12350 RESEARCH PKWY
ORLANDO FL 32826-3276

1 US ARMY CECOM RDEC
ATTN AMSEL RD NV AS UEA
G KLAUBER
10221 BURBECK ROAD
FORT BELVOIR VA 22060-5806

NO. OF
COPIES ORGANIZATION

4 APPLIED PHYSICS LABORATORY
ATTN W D'AMICO
11100 JOHNS HOPKINS ROAD
LAUREL MD 20723-6099

ABERDEEN PROVING GROUND

2 DIRECTOR
US ARMY RSCH LABORATORY
ATTN AMSRD ARL CI OK (TECH LIB)
BLDG 305 APG AA

1 CDR USA AMSAA
ATTN AMXSY EF S MCKEY
BLDG 392

1 US ARMY EVALUATION CMD
ATTN USA CSTE EAC AZ R MIRABELLE
BLDG 4120

2 CDR US ARMAMENT RD&E CTR
ATTN AMSTA AR FST T J MATTS
J WHITESIDE
BLDG 120

1 CDR USA DTC
ATTN CSTE DTC TTM J SCHNELL
RYAN BLDG

3 DIR USARL
ATTN AMSRD ARL WM J SMITH
A HORST
AMSRD ARL WM SG T ROSENBERGER
BLDG 4600

2 DIR USARL
ATTN AMSRD ARL WM B D LYON
W CIEPIELLA
BLDG 4600

20 DIR USARL
ATTN AMSRD ARL WM BA T BROWN (2 CYS)
F BRANDON T BROSSEAU
B DAVIS T HARKINS
D HEPNER G KATULKA
R MCGEE P MULLER
P PEREGINO A THOMPSON
M WILSON M CHILDERS (4 CYS)
K HUBBARD
BLDG 4600

NO. OF
COPIES ORGANIZATION

5 DIR USARL
ATTN AMSRD ARL WM BC P PLOSTINS
M BUNDY J GARNER
B GUIDOS J NEWILL
P PLOSTINS
BLDG 390

3 DIR USARL
ATTN AMSRD ARL WM BF
D WILKERSON H EDGE T HAUG
BLDG 390

2 DIR USARL
ATTN AMSRD ARL WM RP J BORNSTEIN
C SHOEMAKER
BLDG 1121