APPROVED FOR PUBLIC RELEASE; DISTRIBUTION IS UNLIMITED

Policy-Driven Programming of the SDN

S&T Campaign: Computational Sciences
Advanced Computing Architectures

Dr. Vinod Mishra, (410) 278-0114
Vinod.K.Mishra.civ@mail.mil

Research Objective

- To develop SDN based approach to dynamically control network topology, QoS, performance, and security to meet mission-centric policies

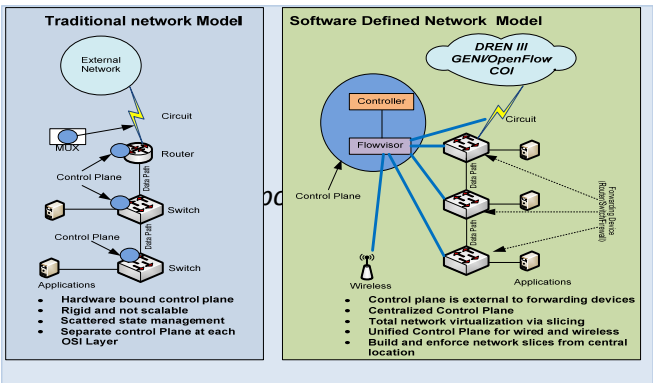

SDN vs Older Approach to Networking

Challenges

- Converting current manual approach to changing network configuration to automated processes
- Extending Controller's visibility into real-time network states with synchronization
- Finding non-proprietary and "open" solutions

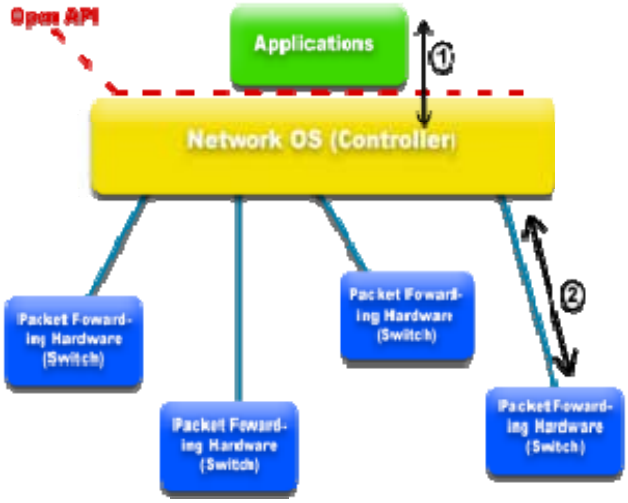

Schematic of SDN-network

ARL Facilities and Capabilities Available to Support Collaborative Research

- First Global Environment for Network Innovation (GENI) Testbed environment to rapidly simulate and study the SDN fabric for HPC
- Multi-Node SDN Lab to validate the simulations
- HPC Assets like 100,000 core supercomputing capabilities
- Parallel programming language tools like MPI, etc

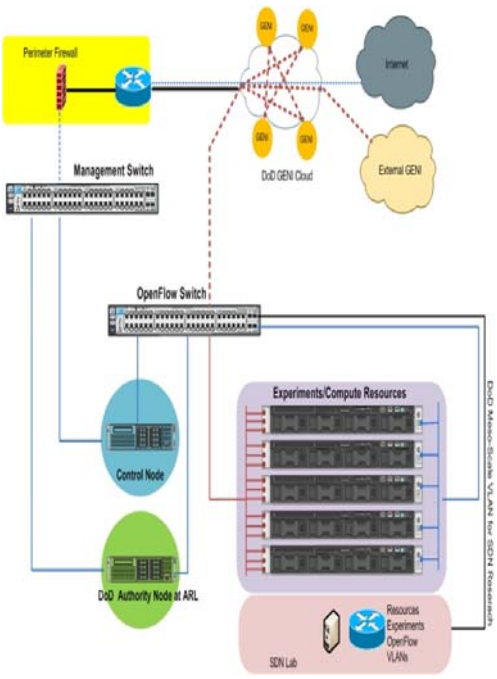

GENI Node at ARL

Complementary Expertise/ Facilities/ Capabilities Sought in Collaboration

- SDN based network programming
- Network Modeling and Simulation capabilities
- Machine Learning
- Understanding Northbound Interfaces to the SDN-controller required for network orchestration

APPROVED FOR PUBLIC RELEASE; DISTRIBUTION IS UNLIMITED