APPROVED FOR PUBLIC RELEASE; DISTRIBUTION IS UNLIMITED

Adaptive Techniques for Advanced Radar Tracking and Optimization

U.S. ARMY RDECOM

ARL open campus

S&T Campaign: Information Sciences
Sensing and Effecting

Dr. Anthony Martone, (301) 394-2531
anthony.f.martone.civ@mail.mil

Research Objective

- Investigate adaptive signal processing techniques for radar to co-exist in the cluttered RF spectrum
- Consider spectrum sensing techniques that identify frequency sub-bands of high signal to noise ratio (SNR) in the spectrum

Example of the cluttered electromagnetic environment. Radar operation in this band could result in poor SNR due to the RF interference.

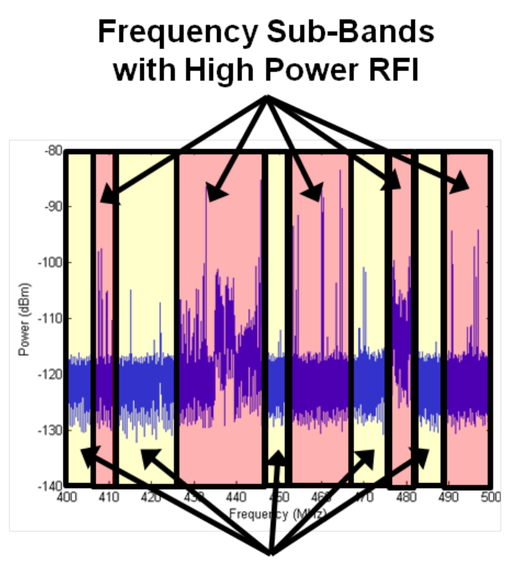

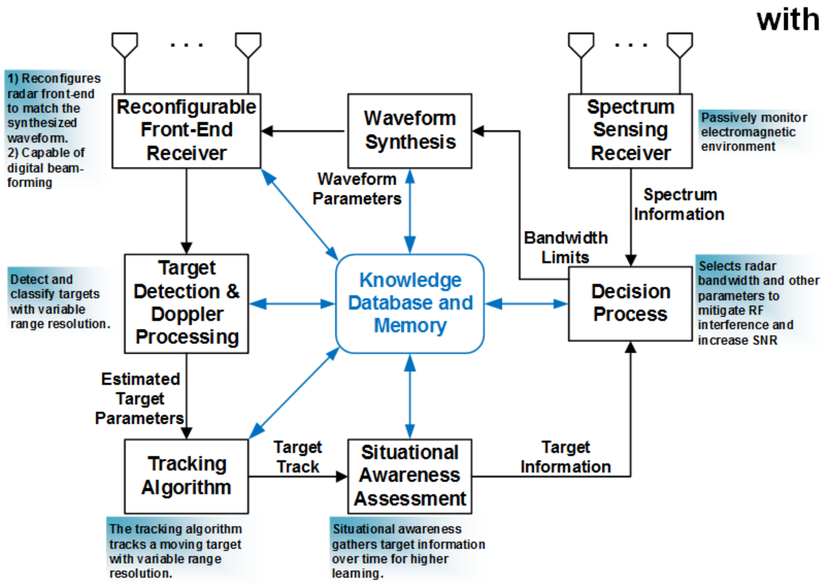

Block diagram of proposed adaptable tracking radar. The radar utilizes spectrum sensing to identify frequency sub-bands with high SNR.

Challenges

- Formulate multi-objective optimization to identify the best SNR to range resolution trade-off available
- Quantify effects on target classification

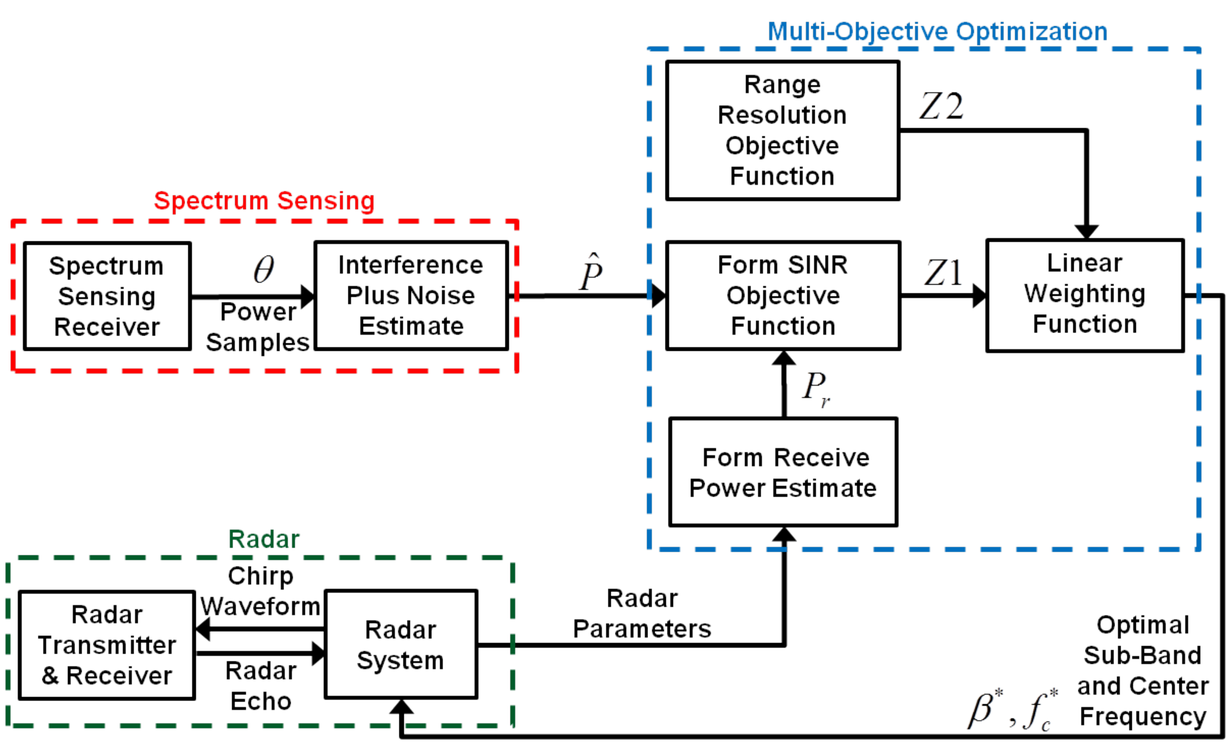

Multi-objective optimization for improved SNR.

ARL Facilities and Capabilities Available to Support Collaborative Research

- Access to multiple anechoic chambers and test facilities
- Specialized spectrum sensing and monitor hardware
- Access to radar sensors and data

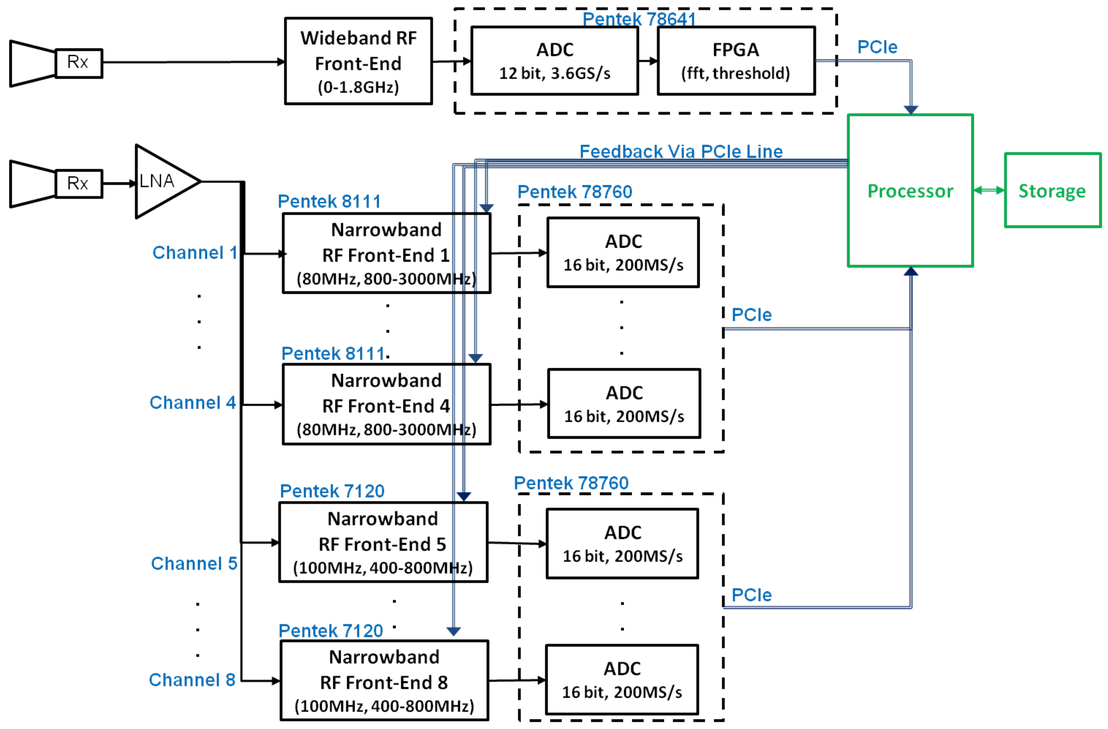

Spectrum sensing hardware development.

Complementary Expertise/ Facilities/ Capabilities Sought in Collaboration

- Develop other objective functions for radar and radio
  - Clutter model, channel capacity, etc
- Quantify how these objective functions impacts target detection, false alarms, and classification
- Investigate tracking algorithms for proposed technique
- Quantify tracking performance for variable radar waveforms
- Study feedback of overall sensor using developed hardware

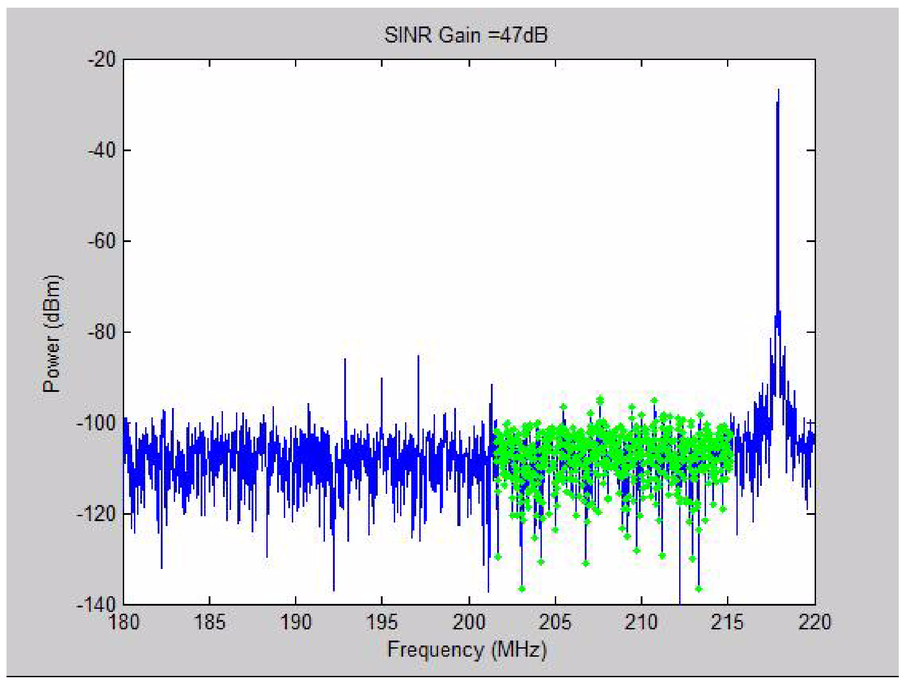

Results of proposed technique (green) in a frequency band with high RF interference (blue). The proposed technique identifies a sub-band with high SNR.

APPROVED FOR PUBLIC RELEASE; DISTRIBUTION IS UNLIMITED