Nanoelectronics Team Efforts in 2D Materials and Electronics

S&T Campaign: Materials Research
Electronics
Nano & 2D

Madan Dubey
(301) 394-1186
madan.dubey.civ@mail.mil

Research Objective

- **To explore the properties and determine the advantages of 2D stacked materials and their interfaces for electronic applications.**
- **Paradigm Shifts: Flexible and Low Power Electronics**

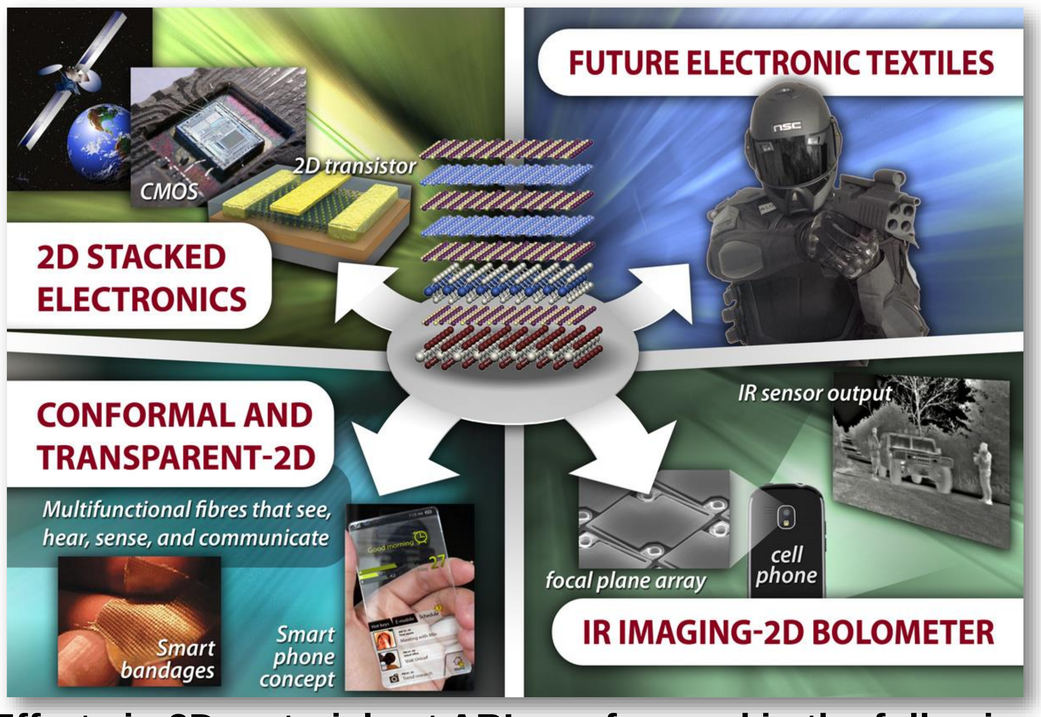

Efforts in 2D materials at ARL are focused in the following key areas: low power 2D electronic circuits, transparent electronics, flexible/conformal electronics, and low-cost, IR imaging.

Challenges

- **ARL is exploring a number of major issues in 2D material development for electronic applications, including:**
- **Investigating 2D material synthesis over large areas**
- **Developing processes and fabrication integration for 2D material-based electronics**
- **Understanding the interfacial and strain effects on electronic properties for 2D materials**

2D Material Studies and Characterization

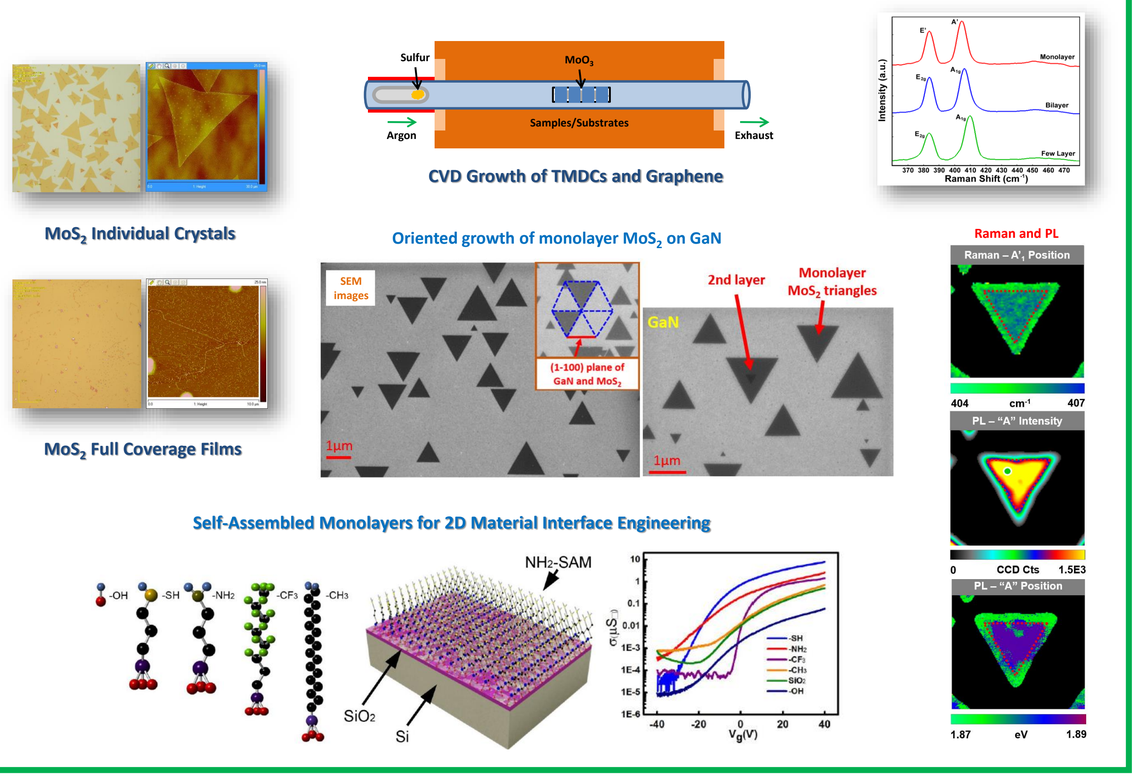

ARL Facilities and Capabilities to Support Collaborative Research

- **Metrology tools including SEM, AFM, PL, XPS, and Raman systems**
- **Electrical test beds including Hall and DC/RF probe stations**
- **2D material growth systems for graphene and TMDCs**
- **SEMASC 15,000 ft2 cleanroom fabrication facility**
- **Expertise in 2D material growth, device fabrication & testing**

2D Device Demonstrations & Studies

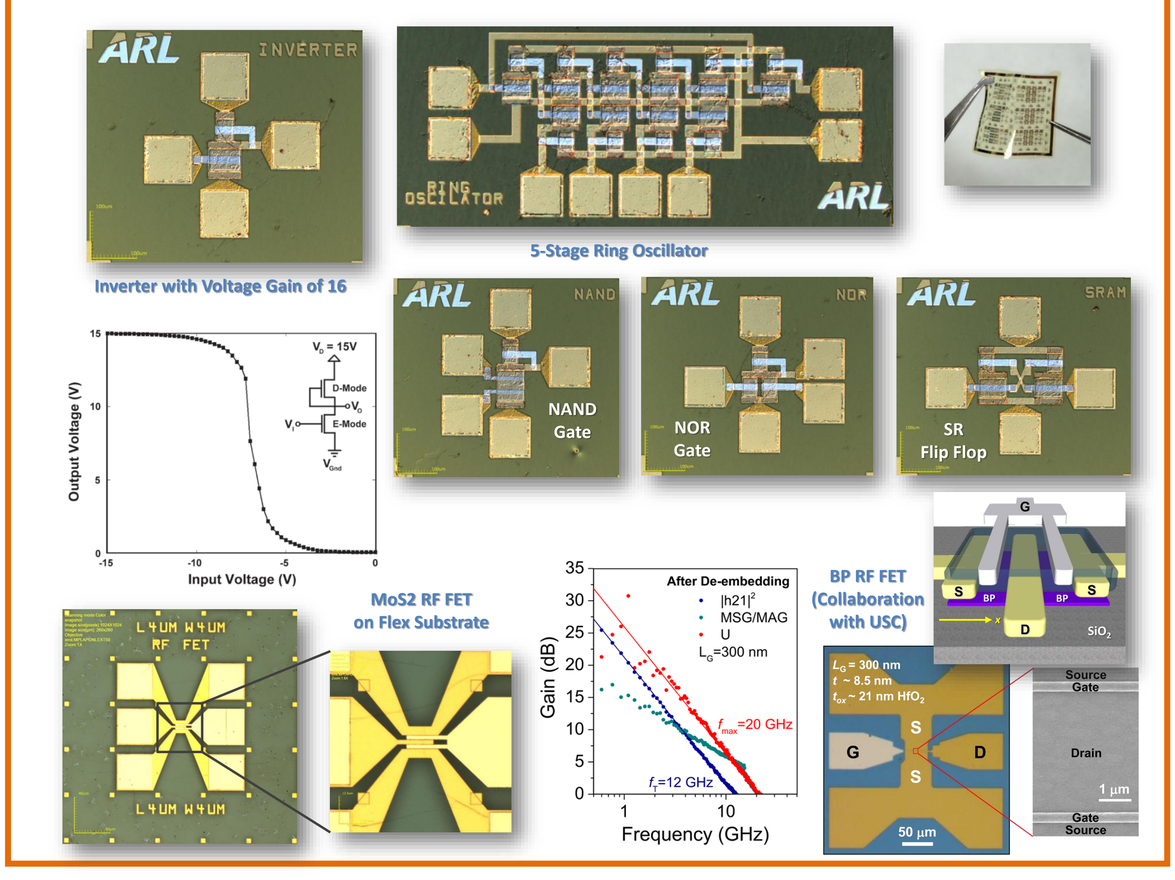

Complementary Expertise/Facilities/ Capabilities Sought in Collaboration

- **Modeling capabilities of 2D materials, their interfaces, and the electrical transport through them – ARL would like to partner with groups to perform experimental validation**
- **Expanded material characterization including TEM, STEM, STM, and in-situ measurements on strained 2D materials**
- **Novel 2D material growth for uniform, large area films**
- **Novel fabrication techniques for producing 2D electronics**

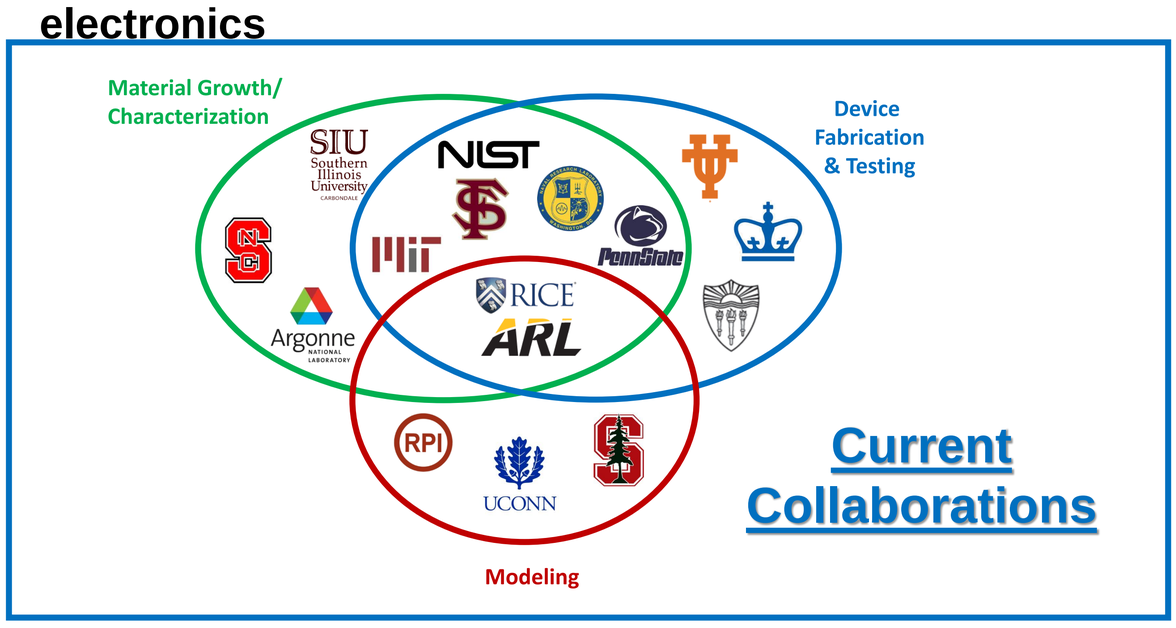

APPROVED FOR PUBLIC RELEASE; DISTRIBUTION IS UNLIMITED